DOCUMENT RESUME

ED 250 465 CE 039 894

AUTHOR Hotchkiss, David; Moore, Carl
TITLE Drafting Technology. A Competency Based Articulated Curriculum.
INSTITUTION Indian Hills Community Coll., Ottumwa, Iowa.
SPONS AGENCY Iowa State Dept. of Public Instruction, Des Moines.
PUB DATE 82
NOTE 191p.; For related documents, see CE 039 895-899. Developed in cooperation with Merged Area XV High Schools.
PUB TYPE Guides - Classroom Use - Guides (For Teachers) (052)

EDRS PRICE MF01/PC08 Plus Postage.
DESCRIPTORS Architectural Drafting; *Articulation (Education); College School Cooperation; *Competence; *Competency Based Education; *Course Content; Curriculum Development; Curriculum Guides; *Drafting; Educational Mobility; Educational Planning; Educational Policy; Engineering Drawing; Institutional Cooperation; Job Analysis; *Job Skills; Occupational Information; Program Content; Secondary Education; Student Evaluation; Task Analysis; Technical Occupations; Transfer Policy; Two Year Colleges; Vocational Education

ABSTRACT

This document is a competency-based curriculum guide designed to promote articulation in drafting programs between and among secondary and postsecondary institutions in the Indian Hills Community College and Merged Area XV high schools in Iowa. The guide is organized in 12 sections. The first six sections provide background information about the articulation project, the audiences served and competencies developed, testing procedures, and provisions for transfer of credits. Sections VII and VIII, which make up the greater part of the document, detail the 34 competencies needed for entry-level drafters and the enabling tasks needed to become proficient in the competencies. Each competency consists of three parts that, when used in combination, provide a detailed outline of major tasks that a student must accomplish to reach one or more previously stated student outcomes. The three parts are the task that the student must accomplish, the conditions under which the student must demonstrate the skills, and standards of acceptable performance. Information sheets illustrated with line drawings are included in the competency statements. The final four sections of the guide are comprised of a class record list and a student competency record keyed to competencies, job titles with relevant competencies, and a glossary of terms used in the drafting curriculum. (KC)

****
* Reproductions supplied by EDRS are the best that can be made *
* from the original document. *
****

1A3213101

ED250465

Indian Hills Community College
in cooperation with
Merged Area XV High Schools
presents

U.S. DEPARTMENT OF EDUCATION
NATIONAL INSTITUTE OF EDUCATION
EDUCATIONAL RESOURCES INFORMATION CENTER (ERIC)
This document has been reproduced as received from the person or organization originating it.
Minor changes have been made to improve reproduction quality.
Points of view or opinions stated in this document do not necessarily represent official NIE position or policy.

"PERMISSION TO REPRODUCE THIS MATERIAL HAS BEEN GRANTED BY
Faber
TO THE EDUCATIONAL RESOURCES INFORMATION CENTER (ERIC)."

A COMPETENCY BASED ARTICULATED CURRICULUM FOR

DRAFTING TECHNOLOGY

A pilot project undertaken in cooperation with The Iowa State Department of Public Instruction

CE039894

TABLE OF CONTENTS

I. Statement of Authorship 1

II. Introduction 2

III. Acknowledgements 5

IV. Project Policy Statement 7

Definition of Articulation 8
Audiences Served 8
Competencies Developed 8

V. Testing Procedures 9

VI. Transfer of Credit 11

VII. Competencies 13

Drafting 15
Machine Drafting 51
Architectural Drafting 76
Civil Drafting 105

VIII. Enabling Tasks 114

1 To Lay Out A Sheet For A Drawing. 116
2 To Do Freehand Lettering. 116
3 To Complete Freehand Sketches 117
4 To Complete Geometric Construction 117
5 To Measure To Scale 118
6 To Complete Multiview Drawings Using Orthographic Projection 119
7 To Draw Sectional Views 120
8 To Complete Auxiliary Views 121
9 To Complete Pictorial Drawings 122
#10 To Trace In Ink A Detail Drawing 123
#11 To Draw Threads And Fasteners 124
#12 To Draw Graphic Charts 125
#13 To Calculate Tolerances and Fits 126
#14 To Draw and Construct Models of Developments and Intersections 126

TABLE OF CONTENTS

VIII. Enabling Tasks (Continued)

#15 To Complete a Plate Cam Profile Drawing . . . 127
#16 To Complete Gear Drawings 128
#17 To Complete Production Drawings 129
#18 To Complete A Technical Illustraton 130
#19 To Draw Plan Views 131
#20 To Draw Elevations 132
#21 To Complete Schedules 133
#22 To Draw Site and Landscape Plans 134
#23 To Draw Electrical and Mechanical Plans . . . 135
#24 To Prepare Bid Sheets 136
#25 To Draw Sections and Details 136-137
#26 To Draw Framing Plans 137-138
#27 To Complete Presentations 138-139
#28 To Complete Design Drawings and outline . . . 140-141
#29 To Measure With A Chain 141
#30 To Draw A Profile 142
#31 To Draw A Map Of A Subdivision Plat 143
#32 To Draw Contour Lines 144
#33 To Determine Elevations By Leveling 145
#34 To Measure Angles 145

IX. Class Record List 146

X. Student Competency Record 151

XI. Job Opportunities 157

XII. Glossary 161

I. STATEMENT OF AUTHORSHIP

DRAFTING

The Director of this project is indebted to the following persons for their exemplary contributions to this publication. Compilation of this model reflects individual faculty preferences. Attempts to reproduce the effort with different faculty will likely produce variances in style.

AUTHORS

David Hotchkiss
Ottumwa High School
501 East Second Street
Ottumwa, Iowa 52501
1-515-683-4444

Carl Moore
Indian Hills Community College
Centerville Campus
North 5th Street
Centerville, Iowa 52544
1-515-856-2143

PROJECT COORDINATOR

Tom Williamson
Articulation Project Coordinator
Indian Hills Community College
Grandview & Elm
Ottumwa, Iowa 52501
1-515-683-5125

II. INTRODUCTION

INTRODUCTION

Indian Hills Community College, the twenty-six Local Education Agencies of Merged Area XV, Southern Prairie Area Education Agency XV (AEA), and the Iowa State Department of Public Instruction share a common commitment to offer current vocational opportunities to Iowans. This commitment has been demonstrated by undertaking a competency based Vocational Articulation project. In an effort to improve opportunities for students of secondary and post-secondary programs in Merged Area XV, those institutions mentioned above endeavored to create a solution to curricular problems such as redundancy, and gaps in subjects, occurring between secondary and post-secondary institutions. On October 21, 1981, an effort toward modifying existing curriculum was initiated by the Iowa Department of Public Instruction, Indian Hills Community College, Southern Prairie Area Education Agency XV, and all local Education Agencies in Merged Area XV. Persons instrumental in conceiving the project include: Jim Athen, Director of Career Education and Dr. Howard Hammond, Director of Teacher Certification, State Department of Public Instruction; Dr. John Van Ast, Associate Professor of Higher Education, Iowa State University; Ed Kuntz, Principal of Ottumwa High School; and Dr. Stephen M. Poort, Dean of Instruction, Indian Hills Community College.

III. ACKNOWLEDGEMENTS

ACKNOWLEDGEMENTS

I am especially indebted to the members of the task force who provided sound counsel and strong support throughout the duration of this 24 month project. Task force members serving on behalf local secondary schools were: Dave Hotchkiss, Drafting (Ottumwa); Carol Gullion, Secretarial (Ottumwa); Ron Langgin, Electronics (Ottumwa); Keith Wells, Agriculture (Fairfield); Scott Maxom, Agriculture (Blakesburg); Harley Hecker, Welding (Ottumwa); and Carl Lawrence, Machine Shop (Ottumwa). Serving as task force members on behalf Indian Hills Community College were: Carl Moore, Drafting; Linda Poli and Connie Schmitz, Secretarial; Jerry Harshman, Electronics; Charles Rosenbalm and Dave McQuoid, Welding; and Everett Pilkington, Agriculture. Garland Ashbacher, Kirkwood Community College, served in support of the Agriculture model.

A special word of appreciation is due the following persons for their assistance in shaping the final form of this project. They are: Ed Kuntz, Principal and Ed Meyer, Vocational Director, Ottumwa High School; Don Smith, Consultant, State Department of Public Instruction; Ray Wingate, Educational Services Director, (AEA); Chuck Lawson, Vocational Director, Indian Hills; Bob Allison, Business Technologies Chairperson, Indian Hills; Betty Guest, Project Secretary; and Lew Debo and Shannon Vesely, Editors. Recognition should also be given the selected private sector persons who helped on two occasions to reaffirm those competencies developed by task force members for each of the six vocational curriculum models.

It was our purpose to put forth a road map on the articulation process that could be emulated by interested educators elsewhere in Iowa. The effort described in this model is one of the six end products of the total articulation process. Should the reader desire a copy of the final report he/she should contact Jim Athen, Director of Career Education, State Department of Public Instruction, Grimes State Office Building, Des Moines, Iowa 50319.

Stephen M. Poort, Ed.D.
Project Director

Thomas Williamson, M.A.
Project Coordinator

IV.

PROJECT POLICY STATEMENT

DEFINITION OF ARTICULATION

AUDIENCES SERVED

COMPETENCIES DEVELOPED

PROJECT POLICY STATEMENT

DEFINITION OF ARTICULATION

Articulation, as defined in this project, is the sequential development of occupational competencies in a non-repetitive fashion building from simple to more complex competencies.

This project provides an articulated system for coordinating the preparation of students to enter the world of work. It is intended to: (a) assure the quality of training at various levels; (b) eliminate repetition and learning gaps as students move from one level of mastery to the next; (c) provide uniform methods of measuring acquired skills of students in various competencies; (d) record those measurements for the benefit of students, prospective employers, and educators who would improve quality of curriculum; (e) encourage employers to match personnel qualifications to specific job requirements; and (f) enable beginning students to understand what they are expected to learn.

AUDIENCES SERVED

Project materials are designed for use by any or all of the following educationally-related groups: students, teachers, administrators, counselors, private sector representatives, and college registrars. Applications vary in accordance with user needs; however, specific suggestions on recommended usage can be found in the body of the final report.

COMPETENCIES DEVELOPED

Competencies have been developed for each of the six vocational programs and articulated from the secondary to the post-secondary level. A separate listing of those competencies can be found in the body of each of the models.

V. TESTING PROCEDURES

TESTING PROCEDURES

The following represents those testing procedures in place as of June 30, 1984.*

	Test on Secondary Level	Test on Post-Secondary Level	Competency Record Maintained
AGRICULTURAL OCCUPATIONS	X		X
BUSINESS OCCUPATIONS	OPTIONAL	X	X
DRAFTING		X	X
ELECTRONIC TECHNOLOGY		X	X
MACHINE TRADES		X	X
WELDING OCCUPATIONS		X	X

For answers to more specific questions regarding testing competency based articulated curriculum, participants are encouraged to contact any of the task force representatives identified on the authors' page of this model.

*Additional information such as individual course listings can be provided by contacting any of the authors of this curriculum model as well as the college registrar.

VI. TRANSFER OF CREDIT

TRANSFER OF DRAFTING CURRICULUM

SECONDARY

EXAMPLE

COMPETENCIES	SEMESTER CREDITS	CATALOG NO.	COURSE
1,2,3,4,5,6,7,8, 9,10	2		Mechanical Drafting
11,12,13,14,15, 16,17,18	2		Machine Drafting
19,20,21,22,23, 25,26	2		Architectural Drafting
24,27,28	1		Advanced Arch. Drafting
29,30,31,32,33, 34	1		Civil Drafting

NOTE: This is only a typical secondary curriculum. OHS does not offer all these courses as may be the case with your high school.

POST-SECONDARY

EXAMPLE

COMPETENCIES	SEMESTER CREDITS	CATALOG NO.	COURSE
1,2,4,5,6,7	2.0	DR070U	Technical Drafting I
8,10,11,12,13	2.0	DR071U	Technical Drafting II
14,15,16,17	2.0	DR072U	Technical Drafting III
3,9	2.0	DR010U	Technical Illustration I
18	1.0	DR011U	Technical Illustration II
19,20,21,22, 23,24,25,26,27, 28	4.0	119:740T IE201T	Architectural Design/ Drafting
29,30,31,32,33, 34	1.0	DR090U	Surveying

VII. COMPETENCIES

COMPETENCIES

Each competency consists of three parts that, when used in combination, provide a detailed outline of a major task that a student must accomplish to reach one or more previously-stated student outcomes. Competencies are described as follows:

a. Task - what the student must accomplish to demonstrate ability to perform the job outlined.

b. Conditions - A description of the circumstances under which the student demonstrates the skill. Usually included are:

   1. time allowance;
   2. tolerances allowed;
   3. references utilized;
   4. specific materials and tools needed;
   5. work location (if other than school site);
   6. and, other limitations unique to the task.

c. Standards of Acceptable Performance - Criteria described that constitute acceptable performance.

   These criteria must:

   1. be compatible with the task and condition;
   2. evaluate all components of the conditions;
   3. include the percentage of responses that must be correct if the competency is primarily cognitive;
   4. and, specify the standard of the criteria.

Competencies needed for initial employment are represented in this model. They are neither designated nor described by grade level. A student may complete all competencies available at a school subject to learning capability and time limitations. Competencies listed in this model do not attempt to represent all those taught at any participating secondary or post-secondary school.

DRAFTING

COMPETENCY NO. 1

TASK:

To lay out a sheet for a drawing.

CONDITIONS AND LIMITATIONS:

Given the necessary tools and equipment, the student will lay out a sheet of drafting paper with the size and design of the border lines, spacing and title block size and design as selected by the instructor (Figure 1-1). All line weight is to be according to the alphabet of lines and be reproducible. Proper drafting procedures will be followed. All work is to be done without reference material and within a 30-minute time period.

CRITERIA OF ACCEPTABLE PERFORMANCE:

1. Lines conform to ANSI Y14.2M and reproducible.

2. Drafting procedures to be in accordance with any standard textbook.

3. All measurements to be $\pm$ 1/64".

4. Corners to meet and not overlap.

5. Task to be completed within the time limit.

COMPETENCY NO. 1

Figure 1-1

SHEET LAYOUT

1. Sheet sizes for all competencies to be selected from the following sizes:

   a. Sheet size: A = 8½ x 11 or 9 x 12
   B = 11 x 17 or 12 x 18
   C = 17 x 22 or 18 x 24
   D = 22 x 34 or 24 x 36

   b. The long dimension of all drawing sheets is to be horizontal.

2. Border line layout, from edge of sheet, to be selected from the following:

   Core and Machine Competencies

   a. A size = Top margin ½" left, right and bottom margin ¼".
   B size = Top, bottom, left, and right margin ½".
   C size = Top, bottom, left, and right margin ½".
   D size = Top, bottom, left, and right margin ½".

   Architectural and Civil Competencies

   a. A size = Top margin ½", left, right and bottom margin ¼".
   B size = Left margin 1", top, right, and bottom margin ½"
   C size = Left margin 1", top, right, and bottom margin ½".
   D size = Left margin 1½", top, right and bottom margin ½".

3. Border lines, title strips, and title blocks for all competencies are to be drawn in accordance with the layouts on the following page.

BEST COPY AVAILABLE

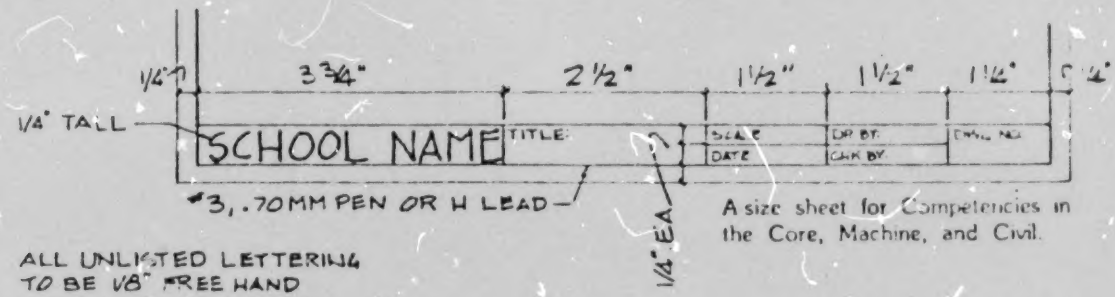

A size sheet for Competencies in the Core, Machine, and Civil.

ALL UNLISTED LETTERING TO BE 1/8" FREE HAND WITH LEAD OR PEN.

PARTS LIST TO BE INCLUDED ONLY WHEN NEEDED

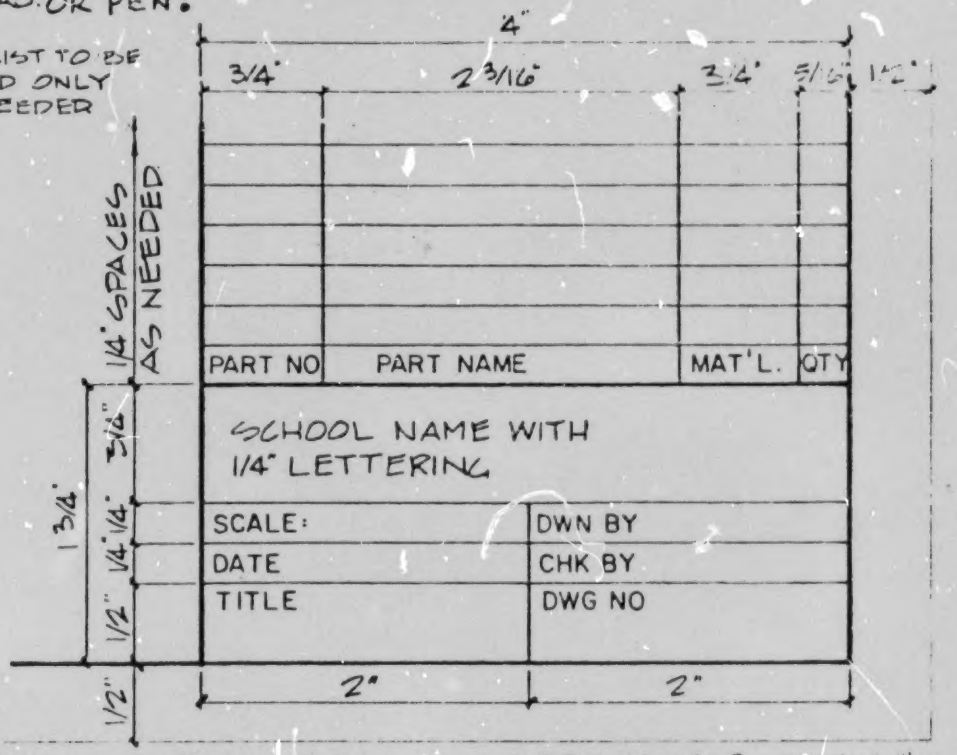

ALL MECHANICAL LETTERING TO BE LEROY 120CL OR EQUAL

B, C, & D size sheet for Competencies in the Core and Mach

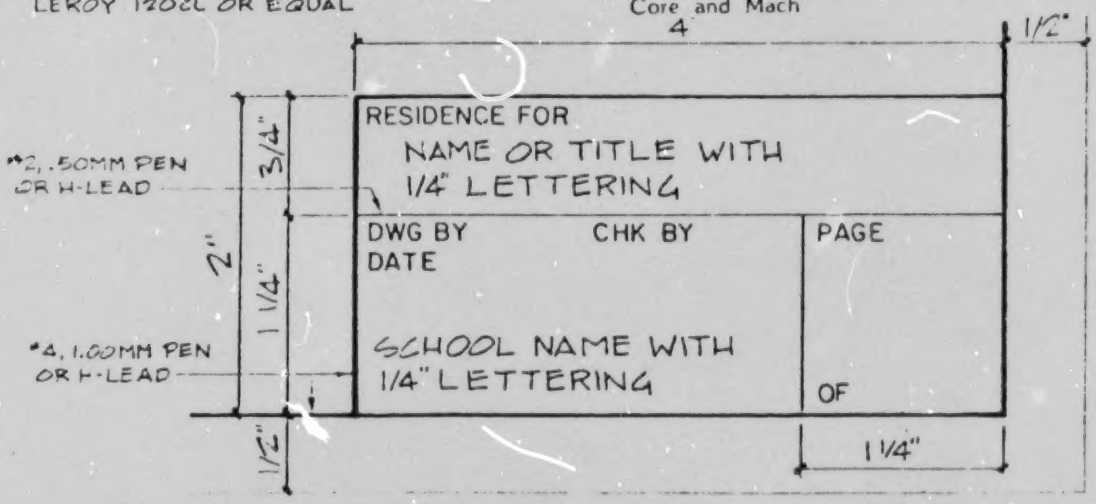

B, C, & D size sheet for Architectural and Civil

DRAFTING

COMPETENCY NO. 2

TASK:

To do freehand lettering

CONDITIONS AND LIMITATIONS:

Given the necessary tools and equipment (including a lettering guide) and 8 1/2" x 11" sheet of tracing paper or drafting film, the student will lay out border and guidelines (Figure 2-1). Apply freehand lettering within every other set of guidelines. Letter, using a single stoke Gothic style, any combination of words or phrases which will include all the letters of the alphabet, and numbers 0 through 9, both in fractions and mixed numbers. The lettering sequence to be equal amounts of:

a. vertical upper case
b. vertical lower case
c. inclined upper case
d. inclined lower case
e. vertical numbers
f. vertical fractions
g. inclined numbers
h. inclined fractions

The sheet will be reproduced. All work is to be done without reference materials and within a two hour time limit.

CRITERIA OF ACCEPTABLE PERFORMANCE:

1. Letters and numbers according to ANSI Y14.2M.
2. Guidelines to be very light and non-reproducible. (Blue non-print lead may be used).
3. Lettering to be reproducible.
4. Letters and numbers to extend to the guidelines but not beyond.
5. All letters of alphabet utilized.
6. All numbers 0-9 included.
7. Fractions and mixed numbers to include 0-9 inclusive.
8. All vertical letters vertical (± 3°) and strokes parallel.
9. All inclined letters 22½° forward (± 3°) and strokes parallel.
10. Task to be completed within the time limit.

COMPETENCY NO. 2
Figure 2-1

SHEET LAYOUT

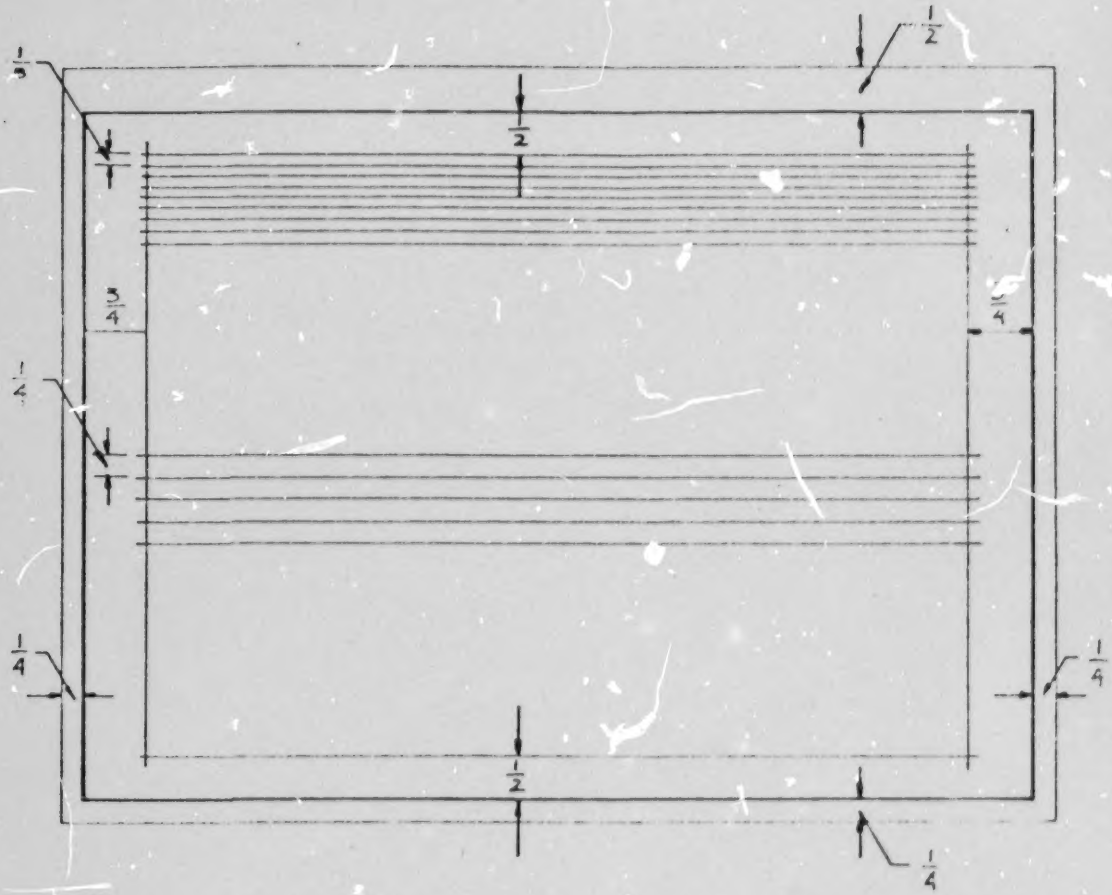

DRAFTING

COMPETENCY NO. 3

TASK:

To complete freehand sketches

GENERAL CONDITIONS AND LIMITATIONS:

Given the necessary tools and materials (including a 2H or softer pencil), plain paper and eraser, the student will sketch, freehand, a multiview, isometric, and oblique drawing of one of the following: V block, sawhorse or V belt pulley. All views must contain the necessary lines, conform with the alphabet of lines and must be reproducible. All work is to be done without reference materials within a one hour time limit per drawing.

GENERAL CRITERIA OF ACCEPTABLE PERFORMANCE:

1. Lines to ANSI Y14.2M and be reproducible.

2. Parallel lines must be parallel to within 1/16" per 1" of line.

3. Task to be completed within the time limit.

A. MULTIVIEW
CONDITIONS AND LIMITATIONS;

The student will sketch the front, top, and right side views of one of the objects described in the General Conditions and Limitations above. The views must be in their proper relationship and proportional.

CRITERIA OF ACCEPTABLE PERFORMANCE:

1. General criteria met.

2. The view has the following relationships, top view directly above front view, right side view in line and to the right of the front view.

3. Front, top, right side views to be in proportion (10% tolerance).

4. All circles must be round.

COMPETENCY NO. 3 (Continued)

B. ISOMETRIC

CONDITIONS AND LIMITATIONS:

The student will sketch in isometric, one of the objects listed in the General Conditions and Limitations. The shape of the sketch is to be in proportion to the shape of the object. Only visible lines are to be shown.

CRITERIA OF ACCEPTABLE PERFORMANCE:

1. General criteria to be met.
2. Depth, width and height planes to be in proportion (10% tolerance).
3. Receding lines to be at a 30° (± 5°) angle from horizontal and parallel.
4. Vertical lines to be vertical (± 3°) and parallel.
5. Circles and arcs on the object must be isometric circles and arcs on the sketch. Proportion to be within 10% tolerance, and center lines parallel to the isometric planes (± 3°).

C. OBLIQUE

CONDITIONS AND LIMITATIONS:

The student will sketch in oblique (cavalier), one of the objects listed in the General Conditions and Limitations. The shape of the sketch is to be in proportion to the shape of the object. Only visible lines are to be shown.

CRITERIA OF ACCEPTABLE PERFORMANCE:

1. General criteria to be met.
2. Depth, width and height planes to be in proportion (10% tolerance).
3. Receding lines to be a 45°, 60°, or 30° (+ 5°) angle from horizontal & parallel.
4. Vertical lines to be vertical (± 3°) and parallel.
5. Circles and arcs on the object that face toward the front will appear as true circles and arcs on the sketch; those that are not faced toward the front will appear as ellipses. Proportion to be written within 10% tolerance, and center lines parallel to the angle of plane (± 3°).

DRAFTING

COMPETENCY NO. 4

TASK:

To complete geometric construction.

GENERAL CONDITIONS AND LIMITATIONS:

Given the necessary tools and equipment, the student will complete the following geometric exercises. Proper drafting procedures will be followed. Construction lines to remain on the drawing but be non-reproducible. Visible lines according to the alphabet of lines and be reproducible. References may not be used.

GENERAL CRITERIA OF ACCEPTABLE PERFORMANCE:

1. Drafting procedures to be in accordance with any standard drafting textbook.
2. Lines conform to ANSI Y14.2M and reproducible.
3. Construction lines to be non-reproducible but remain on the drawing. (Blue non-print lead may be used).
4. Size and location measurements to be $\pm$ 1/64".
5. Tasks to be completed within the time limit specified.

A. Bisect a Given Line

CONDITIONS AND LIMITATIONS: (Note: Equivalent criteria may be assigned)

The student will lay out and bisect a line 2 5/32" in length. The task is to be completed within ten minutes.

CRITERIA OF ACCEPTABLE PERFORMANCE:

1. General criteria to be met.
2. Bisector to be at center.

COMPETENCY NO. 4 (Cont'd)

B. Divide a Given Line Into Equal Parts

CONDITIONS AND LIMITATIONS: (Note: Equivalent criteria may be assigned)

The student will lay out a line 3 7/16" in length and, using a graphical method, divide the line into five equal parts. The task is to be completed within ten minutes.

CRITERIA OF ACCEPTABLE PERFORMANCE:

1. General criteria to be met.

2. Five parts to be equal in length.

C. Construct a Circle Tangent to a Given Line at a Given Point.

CONDITIONS AND LIMITATIONS: (Note: Equivalent criteria may be assigned).

The student will lay out a line 4" long and draw a 2" diameter circle tangent to the line at a point 1½" from either end of the 4" line. The task is to be completed within 10 minutes.

CRITERIA OF ACCEPTABLE PERFORMANCE:

1. General criteria to be met.

2. Point of tangency to be 1½" from either end of 4" line.

3. Circle to be tangent to line.

D. Construct an Arc Tangent to a Given Straight Line and Circle

CONDITIONS AND LIMITATIONS (Note: Equivalent criteria may be assigned).

The student will draw a horizontal line 4" in length and a 2" diameter circle with the center point of the circle 3/4" beyond one end and 1/8" above the given line. Using a 1" radius, the student will construct an arc tangent to the 2" circle and 4" line. The task is to be completed within 15 minutes.

CRITERIA OF ACCEPTABLE PERFORMANCE

1. General criteria to be met.

2. Required arc to be tangent to circle and line.

COMPETENCY NO. 4 (Cont'd)

E. Construct an Arc Tangent to Two Given Circles

CONDITIONS AND LIMITATIONS: (Note: Equivalent criteria may be assigned)

The student will draw two circles each having a 1½" radius and spaced 3½" between centers. Using a 1¼" radius, show an arc tangent in each circle. The task is to be completed within 15 minutes.

CRITERIA OF ACCEPTABLE PERFORMANCE:

1. General criteria to be met.

2. Required arc to be tangent to each circle.

F. Construct an Equilateral Triangle

CONDITIONS AND LIMITATIONS: (Note: Equivalent criteria may be assigned)

The student will construct and draw an equilateral triangle (compass method) with each side of the triangle 1 5/8" long. The task is to be completed within 10 minutes.

CRITERIA OF ACCEPTABLE PERFORMANCE:

1. General criteria to be met.

2. Each side of triangle is 1 5/8" long.

G. Hexagon Within a Given Circle

CONDITIONS AND LIMITATIONS: (Note: Equivalent criteria may be assigned)

The student will lay out vertical and horizontal center lines and a 2 5/8" diameter circle. Construct a hexagon within the circle. The task is to be completed within 10 minutes.

CRITERIA OF ACCEPTABLE PERFORMANCE:

1. General criteria to be met.

2. Center lines at 90° to one another.

3. Sides to be equal, and points of hexagon to meet but not cross circle.

H. Hexagon Across Given Flats

CONDITIONS AND LIMITATIONS: (Note: Equivalent criteria may be assigned)

The student will lay out vertical and horizontal center lines and a circle with a 1 9/16" radius. Construct a hexagon with the sides tangent to the circle. The task is to be completed within 10 minutes.

CRITERIA OF ACCEPTABLE PERFORMANCE:

1. General criteria to be met.

2. Center lines at 90° to one another.

3. Sides to be equal and tangent to the circle.

I. Octagon From a Given Square

CONDITIONS AND LIMITATIONS (Note: Equivalent criteria may be assigned)

The student will draw an octagon (3" across flats in a 3" square. The task is to be completed within 15 minutes.

CRITERIA OF ACCEPTABLE PERFORMANCE:

1. General criteria to be met.

2. Sides to be equal and points of octagon to meet.

3. Top, sides, and bottom of octagon and sides of square are same line.

J. Ellipse Using the Compass Method

CONDITIONS AND LIMITATIONS: (Note: Equivalent criteria may be assigned)

The student will draw an ellipse using a compass. Major axis to be 8" long. The task is to be completed within 20 minutes.

CRITERIA OF ACCEPTABLE PERFORMANCE

1. General criteria to be met.

2. All arcs to meet.

3. Vertical and horizontal center lines at 90° to one another.

K. Ellipse Using an Irregular (French) Curve

CONDITIONS AND LIMITATIONS: (Note: Equivalent criteria may be assigned)

The student will draw an ellipse using the concentric circle method Major axis to be 5" long, minor axis to be 3" long. The task is to be completed within 30 minutes.

CRITERIA OF ACCEPTABLE PERFORMANCE:

1. General criteria to be met.

2. Curve of the ellipse to be smooth and symetrical.

L. Laying Out Angles

CONDITIONS AND LIMITATIONS: (Note: Equivalent criteria may be assigned)

The student will lay out a horizontal line and use a protractor to construct angles of 112°, 28½", and 7½". Each angle will be identified. The task is to be completed within 5 minutes.

CRITERIA OF ACCEPTABLE PERFORMANCE:

1. General criteria to be met.

2. Line to be horizontal.

3. Angles to be of degree specified.

DRAFTING

COMPETENCY NO. 5

TASK:

To measure to scale.

CONDITIONS AND LIMITATIONS. (Note: equivalent criteria may be assigned)

Given the necessary tools and equipment (including an architect's scale, engineer's scale, mechanical engineer [draftsman] scale, metric scale) and a sheet of 8½" x 11" drafting paper, the student will place length of paper in horizontal position and draw a line from bottom to top 1½" in from left edge. Using this line as a starting point, the student will measure and draw horizontal lines of the lengths specified and with the scales listed below. The lines are to be spaced ½" apart and identified with the same letters. All work is to be completed without references within 45 minutes.

A 3 11/16" at full size
B 6 3/4" at 3/4 size
C 11½" at ¼ size
D 8¼" at ¼ size
E 235'-0" at 1" = 50'
F 13'-6 " at 1" - 10'
G 66'-0 at 1" =20'
H 365' at 1" = 100'
I 3'-4½" at 1½" = 1'0"
J 22'-7" at ¼" = 1'0"
K 8 3/4" at 3" = 1'0"
L 7'-1½" at 3/4" = 1'0"
M 67 mm at 1 mm = 1 mm
N 8.3 cm at full scale

CRITERIA OF ACCEPTABLE PERFORMANCE:

1. Length of drawing sheet to be horizontal.

2. Starting line 1¼" from left edge (± 1/64") and line spacing ½" (± 1/64").

3. All lines labeled with letters as specified.

4. The length of lines to be within a tolerance of ½ of 1 division on the scale used.

5. Task to be completed within the time limit.

COMPETENCY NO. 6

TASK:

To complete multiview drawings using orthographic projection.

GENERAL CONDITIONS AND LIMITATIONS:

Given the necessary tools, equipment, tracing paper and a sheet layout (Figure 1-1), the student will center and draw the following orthographic projections (Figures 601, 602 and 603). All lines to be according to the alphabet of lines and reproducible. All work to be completed without reference.

GENERAL CRITERIA OF ACCEPTABLE PERFORMANCE:

1. Sheet layout according to Figure 1-1.
2. Lines to conform to ANSI Y14.2M and reproducible. Construction lines non-reproducible (Blue non-print lead may be used).
3. Views to be placed in standard orthographic projection and to include all necessary visible, hidden, and center lines.
4. Top and bottom margin between views and border line to be equal (± ¼")
5. Left and right margin between views and border lines to be equal (± ¼")
6. Letters and numbers to be according to ANSI Y14.2M.
7. Corners to meet and not overlap.
8. Views to agree with each other and with information given.

A. Orthographic Projection (Architectural)

CONDITIONS AND LIMITATIONS: (Note: Equivalent criteria may be assigned)

Given a dimensioned isometric drawing of a drawer for a base cabinet (Figure 6-1), the student will center and draw using the scale 1½" = 1'-0" the front, top, and right side views. No dimensions required. Task to be completed within 45 minutes.

CRITERIA OF ACCEPTABLE PERFORMANCE:

1. General criteria to be met.
2. Measurements to be ± 1" on the 1½" = 1'-0" scale.
3. Front, top, and right side views shown.
4. Task to be completed within the time limit.

COMPETENCY NO. 6 (Cont'd)

B. Orthographic Projection (Civil)

CONDITIONS AND LIMITATIONS: (Note: Equivalent criteria may be assigned)

Given a dimensioned oblique drawing of a pre-cast concrete beam (Figure 6-2), the student will center and draw, using the scale 1" = 1'0", the necessary views needed for casting. No dimensions required. Task to be completed within 45 minutes.

CRITERIA OF ACCEPTABLE PERFORMANCE:

1. General criteria to be met
2. Measurements to be ± 1" on the 1" = 1'-0" scale.
3. Necessary views are front and top or front and side. Front view to show end of beam.
4. Task completed within the time limit.

C. Orthographic Projection (Machine)

CONDITIONS AND LIMITATIONS: (Note: Equivalent criteria may be assigned)

Given a dimensioned isometric drawing of a chuck jaw (Figure 6-3), the student will center and draw using a full scale, the necessary views for fabrication. Dimensions will be included on the drawing. Task to be completed within 2½ hours.

CRITERIA OF ACCEPTABLE PERFORMANCE:

1. General criteria to be met.
2. Measurements to be ± 1/64".
3. Necessary views will be front and top. (Right side view may be included but not required).
4. Dimensions necessary for fabrication of the part will be shown.
5. Dimensioning to be according to ANSI Y14.5.
6. Task to be completed within the time limit.

COMPETENCY NO. 6
Figure 6-1

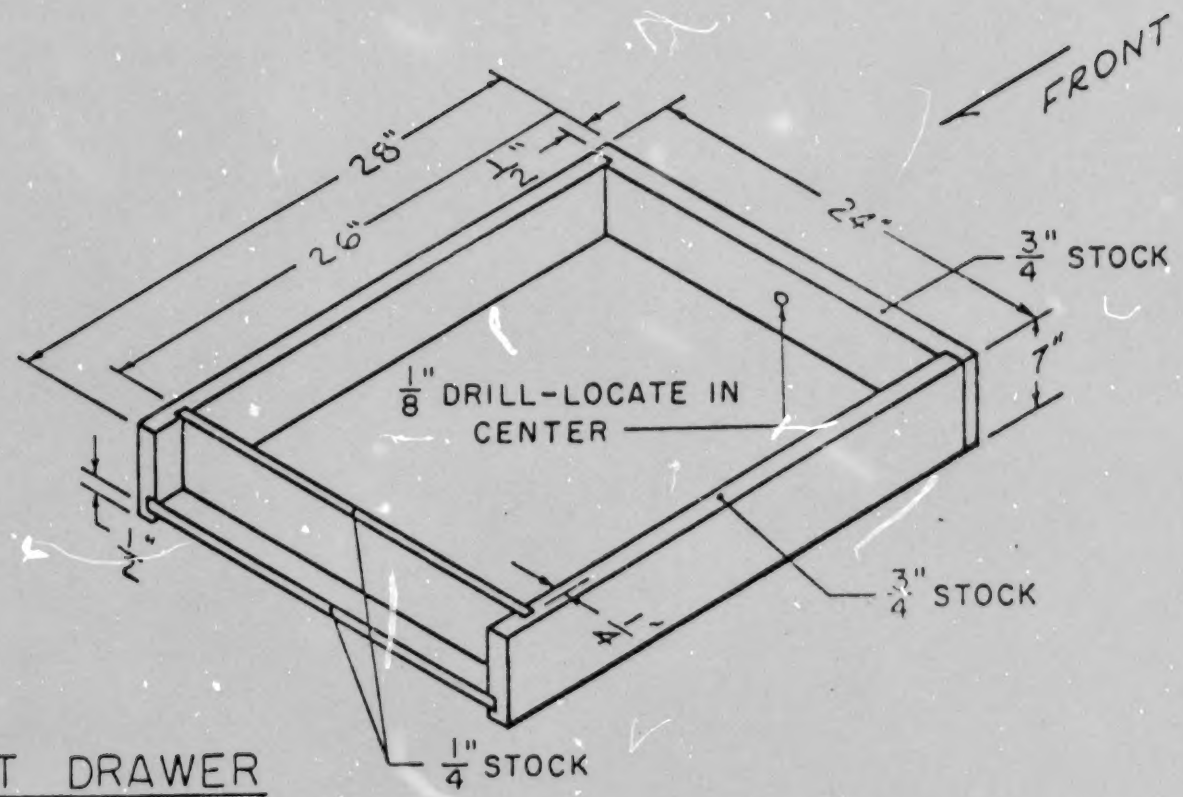

CABINET DRAWER
NOT TO SCALE

COMPETENCY NO. 6
Figure 6-2

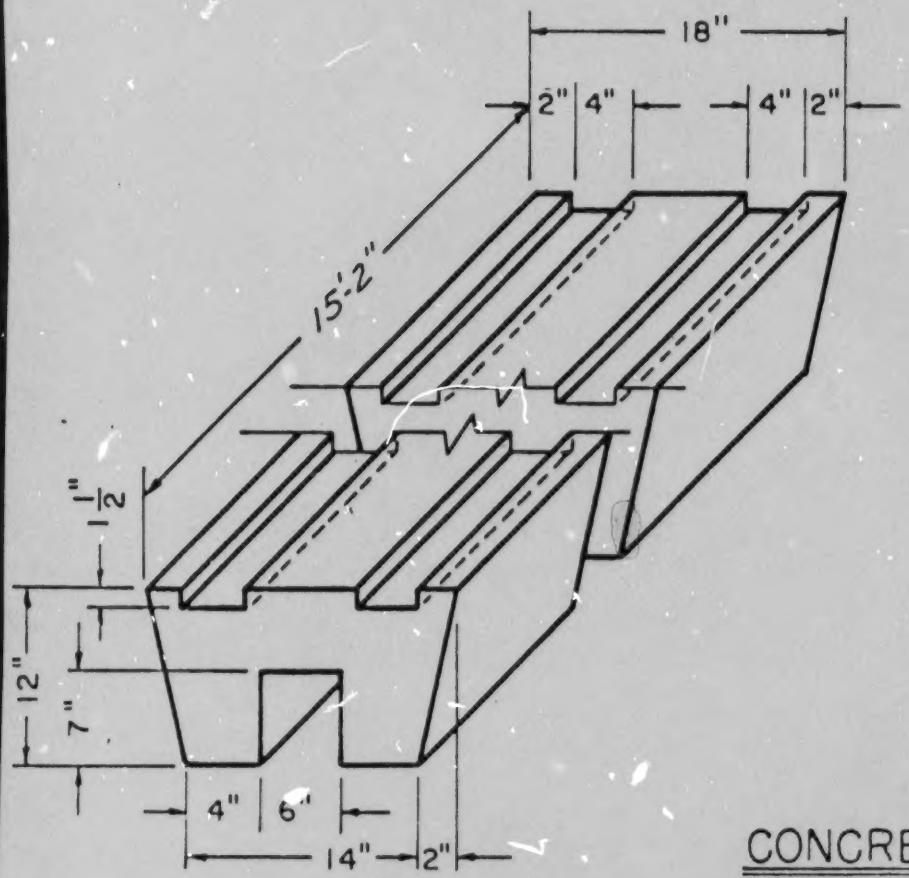

CONCRETE BEAM
NOT TO SCALE

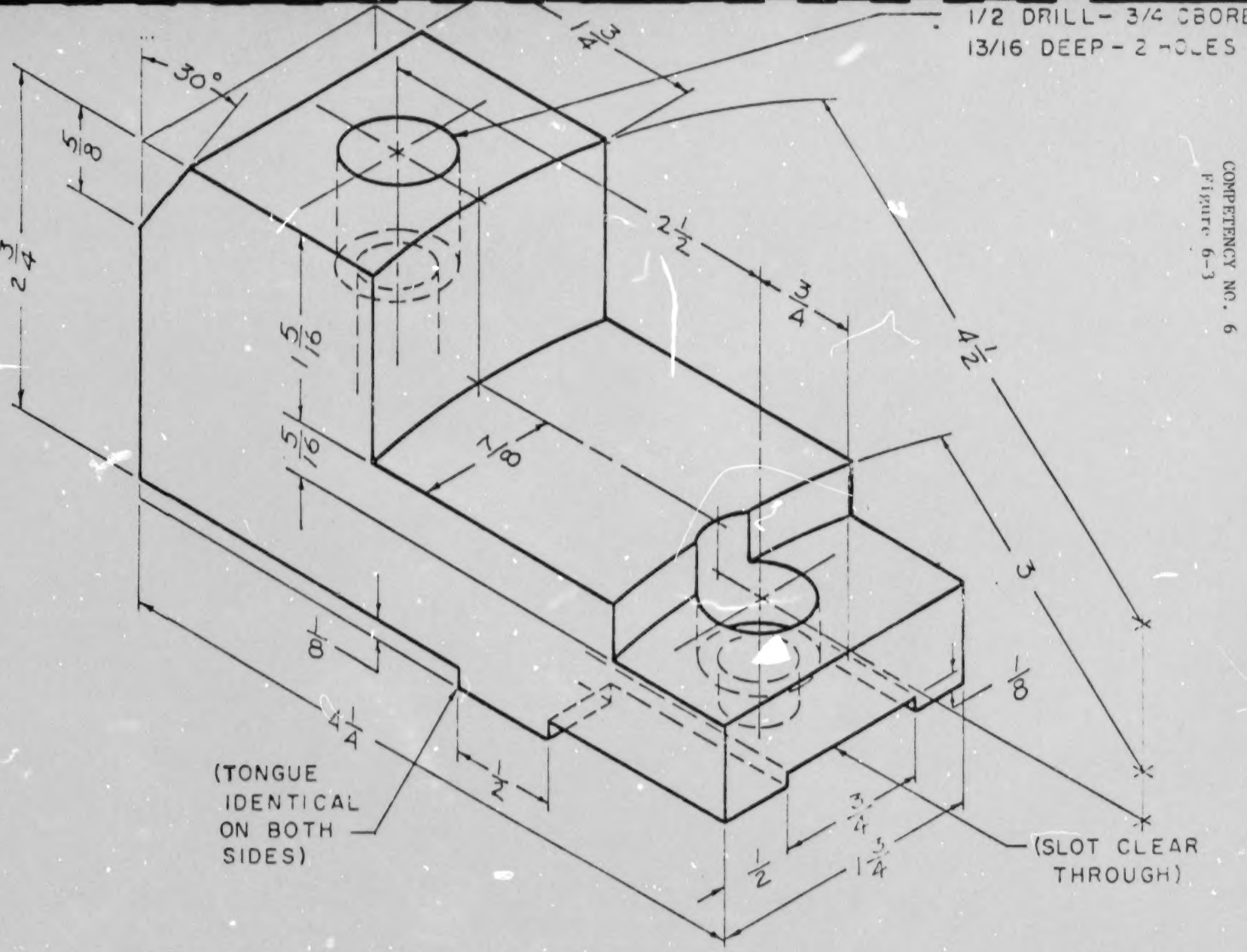

COMPETENCY NO. 6
Figure 6-3

CHUCK JAW
NOT TO SCALE

BEST COPY AVAILABLE

DRAFTING

COMPETENCY NO. 7

TASK:

To draw sectional views.

GENERAL CONDITIONS AND LIMITATIONS:

Given the necessary tools, equipment, tracing paper, and sheet layout (Figure 1-1), the student will center and draw the following sectional views (Figures 7-1, 7-2, 7-3) in orthographic projection. All lines to be according to the alphabet of lines and reproducible. All work is to be completed wihout references. Sectional lining will be shown in the sectional views.

GENERAL CRITERIA OF ACCEPTABLE PERFORMANCE:

1. Sheet layout according to Figure 1-1.
2. Lines according to the alphabet of lines as specified in ANSI Y14.2M. and be reproducible.
3. Views to be placed in standard orthographic projection including all necessary lines.
4. Letters and numbers to be according to ANSI Y14.2M.
5. Measurements to be ± 1/64".
6. Corners to meet but not overlap.
7. Section lining to be drawn according to ANSI Y14.2M and Y14.3.
8. View(s) to be centered in the field of drawing (± 1/8").

A. Half Section

CONDITIONS AND LIMITATIONS: (Note: Equivalent criteria may be used)

Given a dimensioned oblique drawing of a pipe plug (Figure 7-1) or similar part, the student will draw, full scale, a view which shows the six sides of the hexagon and a half sectional view. Dimensions necessary for fabrication will be shown. A cutting plane line will be shown. Complete task within 1½ hours.

CRITERIA OF ACCEPTABLE PERFORMANCE:

1. All general criteria to be met.
2. View showing six sides of the hexagon and a half sectional view are shown.
3. Cutting plane line is shown in the front view and drawn according to ANSI Y14.2M and Y14.3.

CRITERIA OF ACCEPTABLE PERFORMANCE:

4. The half section is drawn according to ANSI Y14.3.
5. Dimensions necessary for fabrication of the part to be shown.
6. Dimensions to be according to ANSI Y14.5-1.
7. Task to be completed within time limit.

B. Revolved Section

CONDITIONS AND LIMITATIONS: (Note: Equivalent criteria may be used)

Given a metric scale and a dimensioned isometric drawing of a stop rod (Figure 7-2) or similar part, the student will draw, full scale, a front view and revolved section of each shape. Conventional breaks will be drawn for the circular shape. No dimensions required. Task to be completed within 45 minutes.

CRITERIA OF ACCEPTABLE PERFORMANCE:

1. All general criteria to be met.
2. Front view to show length of the object.
3. Revolved section for each shape is drawn according to ANSI Y14.3.
4. Conventional breaks are shown for the circular shape according to ANSI Y14.3.
5. Task to be completed within the time limit.

C. Aligned Section

CONDITIONS AND LIMITATIONS: (Note: Equivalent criteria may be used).

Given a dimensioned isometric drawing of a stem support (Figure 7-3) or similar part, the student will draw, full scale a front view and an aligned sectional view. Dimensions will be shown. A cutting plane line will be shown. Task to be completed within 1½ hours.

CRITERIA OF ACCEPTABLE PERFORMANCE:

1. All general criteria to be met.
2. Front and aligned sectional views are shown.
3. Aligned sectional view is drawn according to ANSI Y14.3.
4. Cutting plane is shown in the front view and drawn according to ANSI Y14.3.
5. Dimensions necessary for fabrication of the part to be shown.
6. Dimensions to be according to ANSI Y14.5.
7. Task to be completed within the time limit.

COMPETENCY NO. 7

Figure 7-1

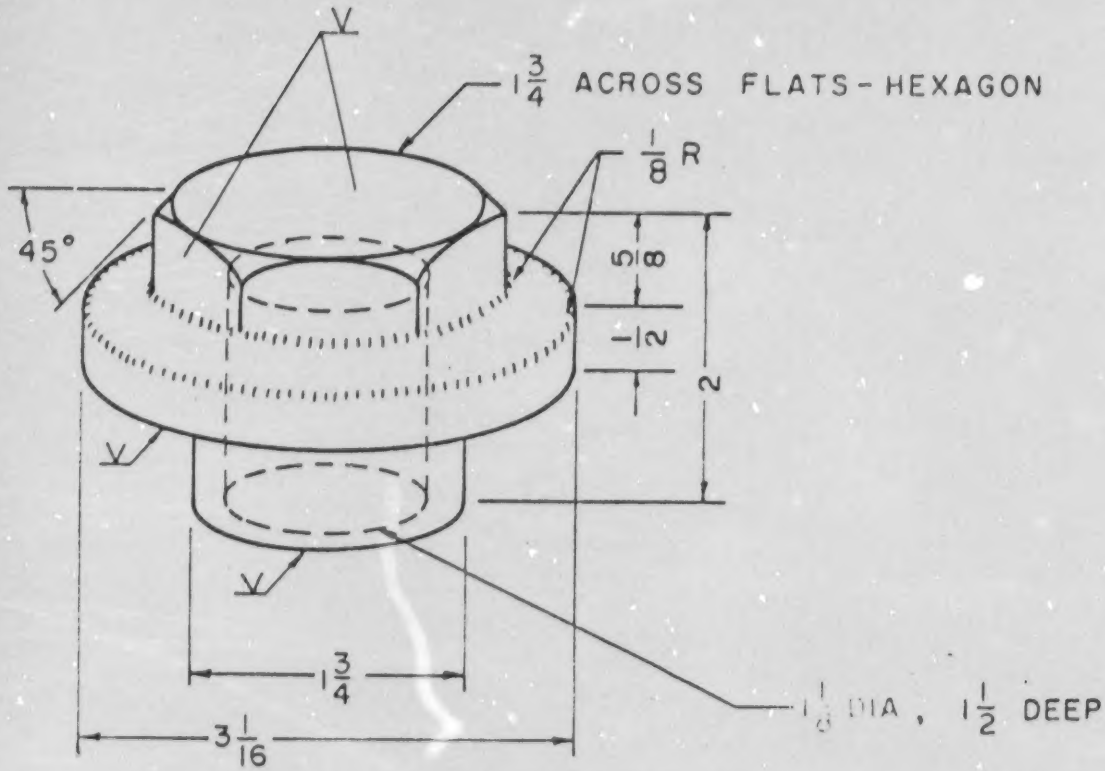

PIPE PLUG

NOT TO SCALE

BEST COPY AVAILABLE

COMPETENCY NO. 7

Figure 7-2

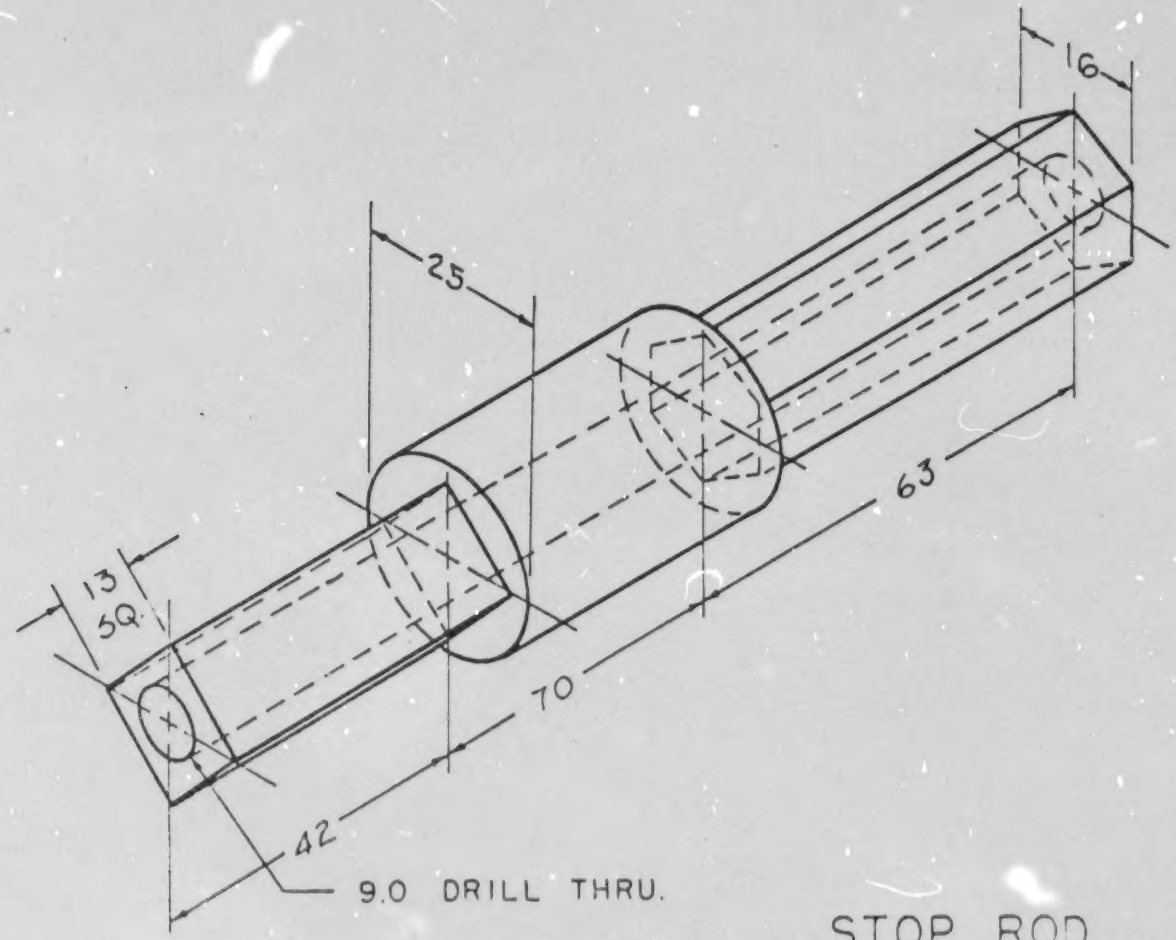

STOP ROD

NOT TO SCALE
DIMENSIONS IN MILLIMETERS

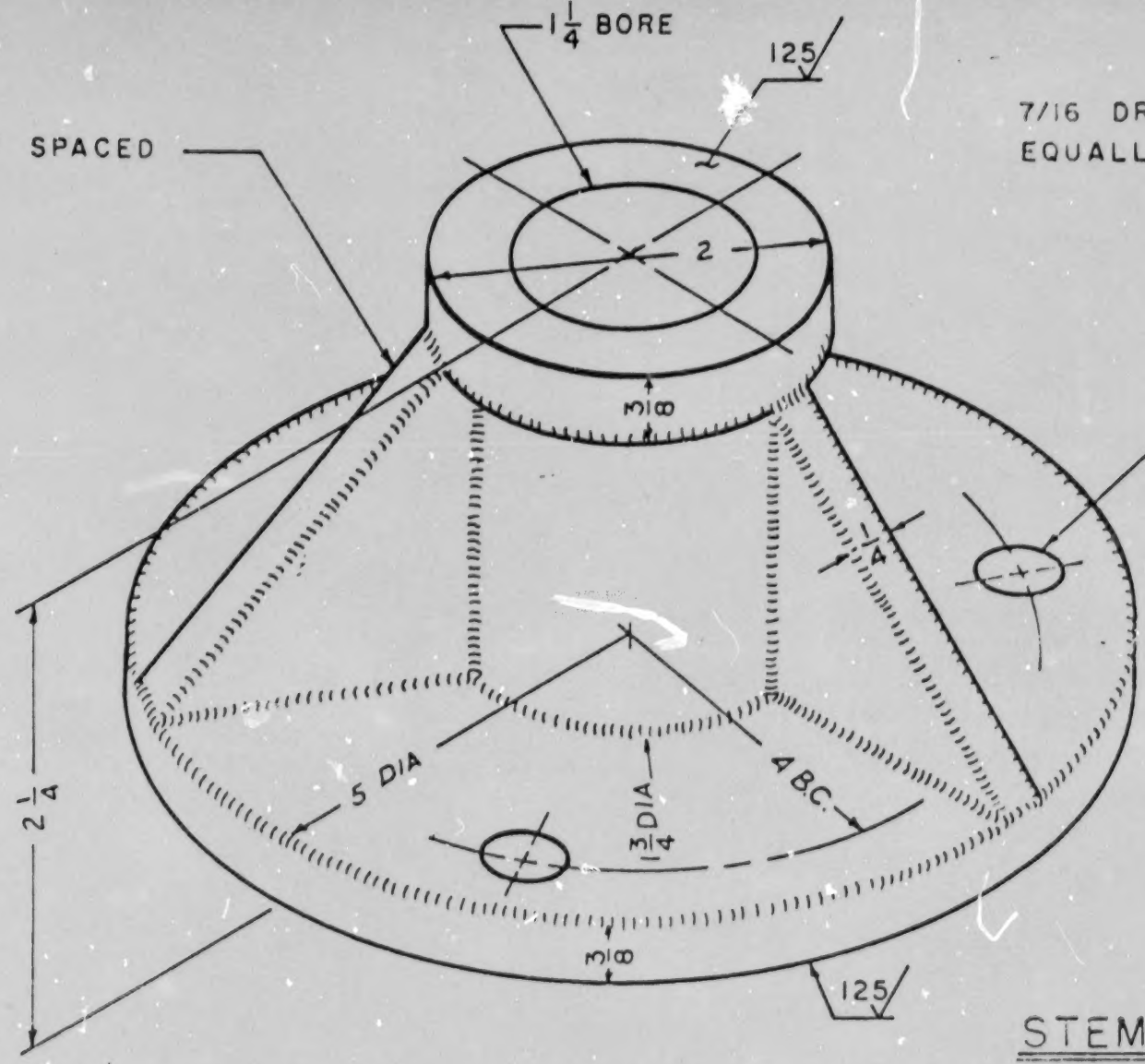

STEM SUPPORT

NOT TO SCALE
ROUNDS & FILLETS
1/8 R

DRAFTING

COMPETENCY NO. 8

TASK:

To complete auxiliary views

GENERAL CONDITIONS AND LIMITATIONS:

Given the necessary tools, equipment, tracing paper and a sheet layout (Figure 1-1), the student will draw the following auxiliary projections (Figures 8-1 and 8-2). All lines to be according to the alphabet of lines and reproducible. All work to be completed without references.

GENERAL CRITERIA OF ACCEPTABLE PERFORMANCE:

1. Sheet layout according to Figure 1-1.
2. Lines to conform to alphabet of lines as specified in ANSI Y14.2M and reproducible. Construction lines non-reproducible (blue non-print lead may be used).
3. Views to be placed in standard orthographic projection and to include all necessary visible, hidden, and center lines.
4. Letters and numbers according to ANSI Y14.2M-6.
5. Corners to meet and not overlap.
6. Views to agree with each other.

A. Primary Auxiliary

CONDITIONS AND LIMITATIONS: (Note: Equivalent criteria may be used)

Given a dimensioned isometric drawing of an angle arm (Figure 8-1), the student will draw and dimension the necessary views including a primary auxiliary view which will show the true shape of the inclined surface. Task to be completed within two hours.

CRITERIA OF ACCEPTABLE PERFORMANCE:

1. General criteria to be met.
2. Necessary views of the angle arm to include front, top, and primary auxiliary.

COMPETENCY NO. 8 (cont.)

CRITERIA OF ACCPETABLE PERFORMANCE: (cont.)

3. Auxiliary view to be projected perpendicular or at a right angle to the inclined surface (no tolerance).

4. Measurements to be ± 1/64".

5. Dimensions necessary for fabrication of the part will be shown.

6. Dimensioning according to ANSI Y14.5-1.

7. Task to be completed within the time limit.

B. Secondary Auxiliary

CONDITIONS AND LIMITATIONS: (Note: Equivalent criteria may be used)

Given a dimensioned isometric drawing of a mounting bracket (Figure 8-2), the student will draw the necessary views including a secondary auxiliary view of the inclined surface(s). Task to be completed within three hours.

CRITERIA OF ACCEPTABLE PERFORMANCE:

1. General criteria to be met.

2. Necessary views of the mounting bracket to include front, top, right side, primary auxiliary, and secondary auxiliary.

3. Primary auxiliary view projected from a principal view and the secondary auxiliary is to be projected from the primary auxiliary view.

4. Measurements to be ± 1/64".

5. Task to be completed within the time limit.

DRAFTING
COMPETENCY NO. 8
Figure 8-1

ANGLE ARM

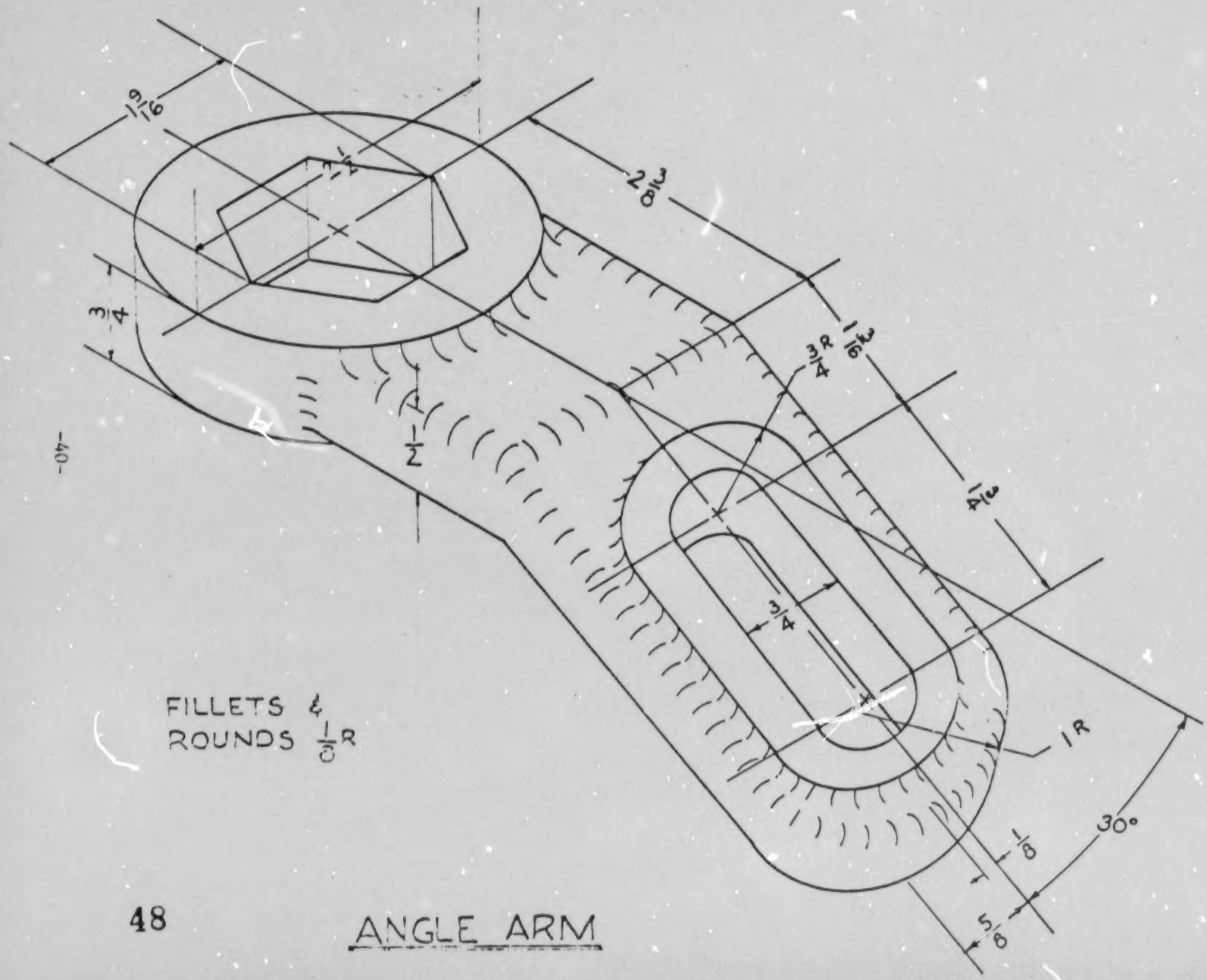

48

ANGLE ARM

49

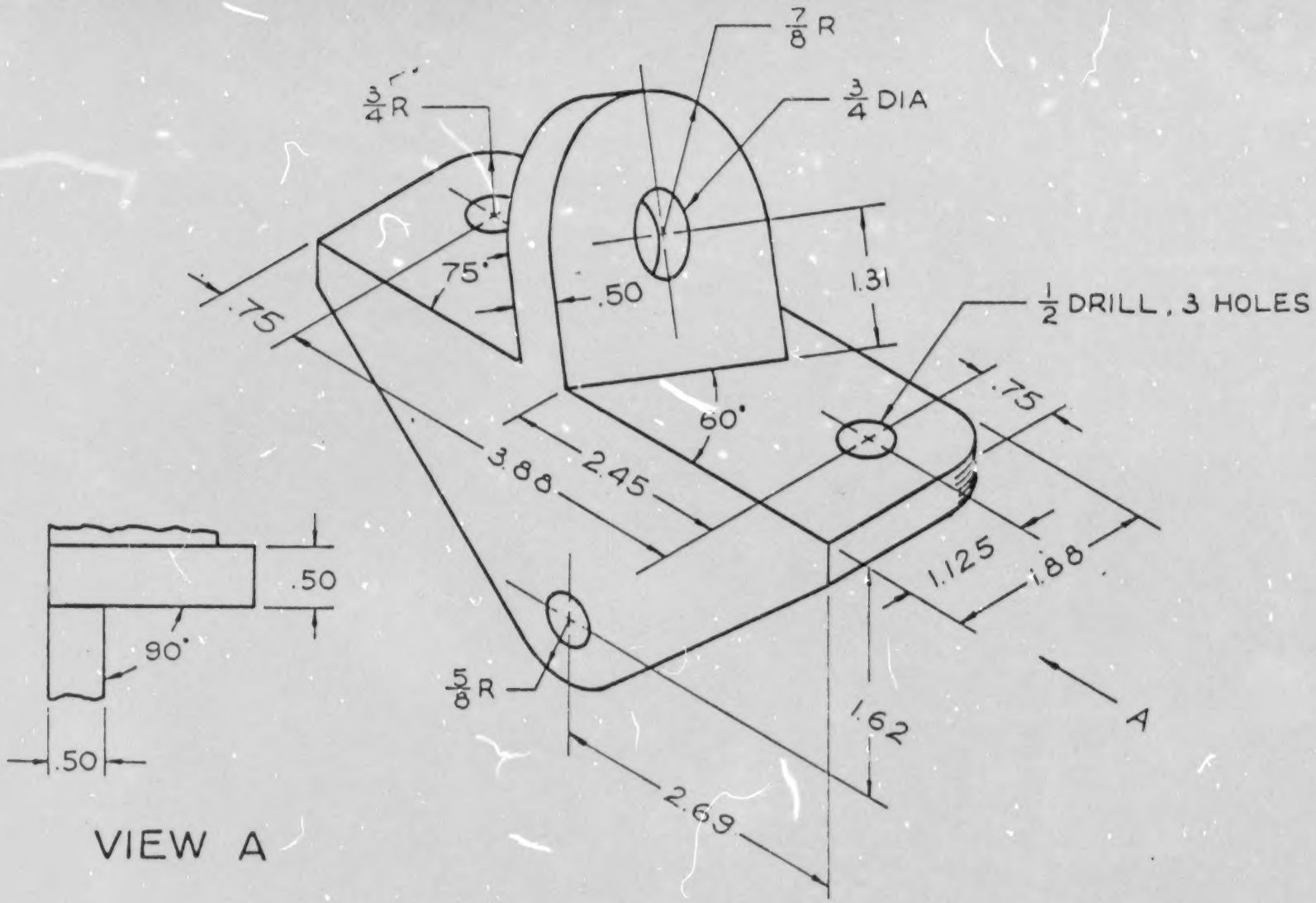

MOUNTING BRACKET
(NOT TO SCALE)

DRAFTING

COMPETENCY NO. 9

TASK:

To complete pictorial drawings

GENERAL CONDITIONS AND LIMITATIONS:

Given the necessary tools and equipment, tracing paper and a sheet layout (Figure 1-1), the student will draw the following pictorial drawings (Figures 9-1, 9-2, and 9-3). All lines to be according to the alphabet of lines and reproducible. Construction lines to be non-reproducible. All work to be completed without references.

GENERAL CRITERIA OF ACCEPTABLE PERFORMANCE:

1. Sheet layout according to Figure 1-1.

2. Lines to conform to ANSI Y14.2M-3. and Y14.4-4 and reproducible. Construction lines non-reproducible. (Blue non-print lead may be used).

3. Corners to meet and not overlap.

A. Isometric Drawing

CONDITIONS AND LIMITATIONS: (Note: Equivalent criteria may be used)

The student will center (Figure 9-4) and draw, full size, an isometric view of a rod guide (Figure 9-1). Point A of the rod guide will be the starting isometric corner. Dimensioning is to be included. Isometric arcs will be drawn with a compass and the hole with a template. Task to be completed within one hour.

CRITERIA OF ACCEPTABLE PERFORMANCE:

1. All general criteria to be met.

2. View will be centered in field of drawing (± 1/8").

3. Isometric axis to conform to ANSI Y14.4.

4. Dimensioning according to ANSI Y14.4.

5. Letters and numbers to be according to ANSI Y14.2M.

6. Circles and arcs must be isometric circles and arcs on the drawing.

COMPETENCY NO. 9 (cont.)

CRITERIA OF ACCEPTABLE PERFORMANCE: (Cont.)

7. All arcs to meet

8. Measurements to be ± 1/64".

9. Arcs drawn with compass and holes with template.

10. Task to be completed within the time limit.

B. Oblique Drawing

CONDITIONS AND LIMITATIONS: (Note: Equivalent criteria may be used)

The student will center (Figure 9.4) and draw, using a ½" = 1'-0" scale, an oblique cabinet view of a bathroom cabinet (Figure 9-2). Point A will be the starting corner. Dimensioning to be included. Task to be completed within 1½ hours.

CRITERIA OF ACCEPTABLE PERFORMANCE:

1. All general criteria to be met.

2. View will be centered in the field of drawing (± 1/8").

3. Drawing to conform to ANSI Y14.4-3.2.

4. Depth of drawing to be half-size. Dimensions to be actual size.

5. Dimension according to ANSI Y14.4-10 and full size.

6. Letters and numbers to be according to ANSI Y14.2M-6.

7. Correct scale used.

8. Measurements to be ± 1/64".

9. Task to be completed within the time limit.

C. One Point Perspective

CONDITIONS AND LIMITATIONS: (Note: Equivalent criteria may be used)

The student will draw a one-point perspective of a desk (Figure 9-3) to a scale of 3/4" = 1'-0". The station point, horizon line, vanishing point, and picture plane to be positioned to give a realistic shape of depth

COMPETENCY NO. 9 (cont.)

CONDITIONS AND LIMITATIONS: (cont.)

projection and labeled. Front face of desk to be on picture plane. The drawing need not be centered on the sheet. Task to be completed within 1½ hours.

CRITERIA OF ACCEPTABLE PERFORMANCE:

1. All general criteria to be met.
2. Vanishing point to be on horizon line, directly above station point.
3. Front face in perspective view to be of scale size and shape.
4. The station point, horizon line, vanishing point, and picture plane to be labeled on drawing.
5. All receding lines, if extended, to meet at the vanishing point.
6. Station point, horizon line, vanishing point and picture plane to give a realistic, (non-distorted) shape of depth projection.
7. Task to be completed within time limit.

DRAFTING
COMPETENCY NO. 9
Figure 9-1

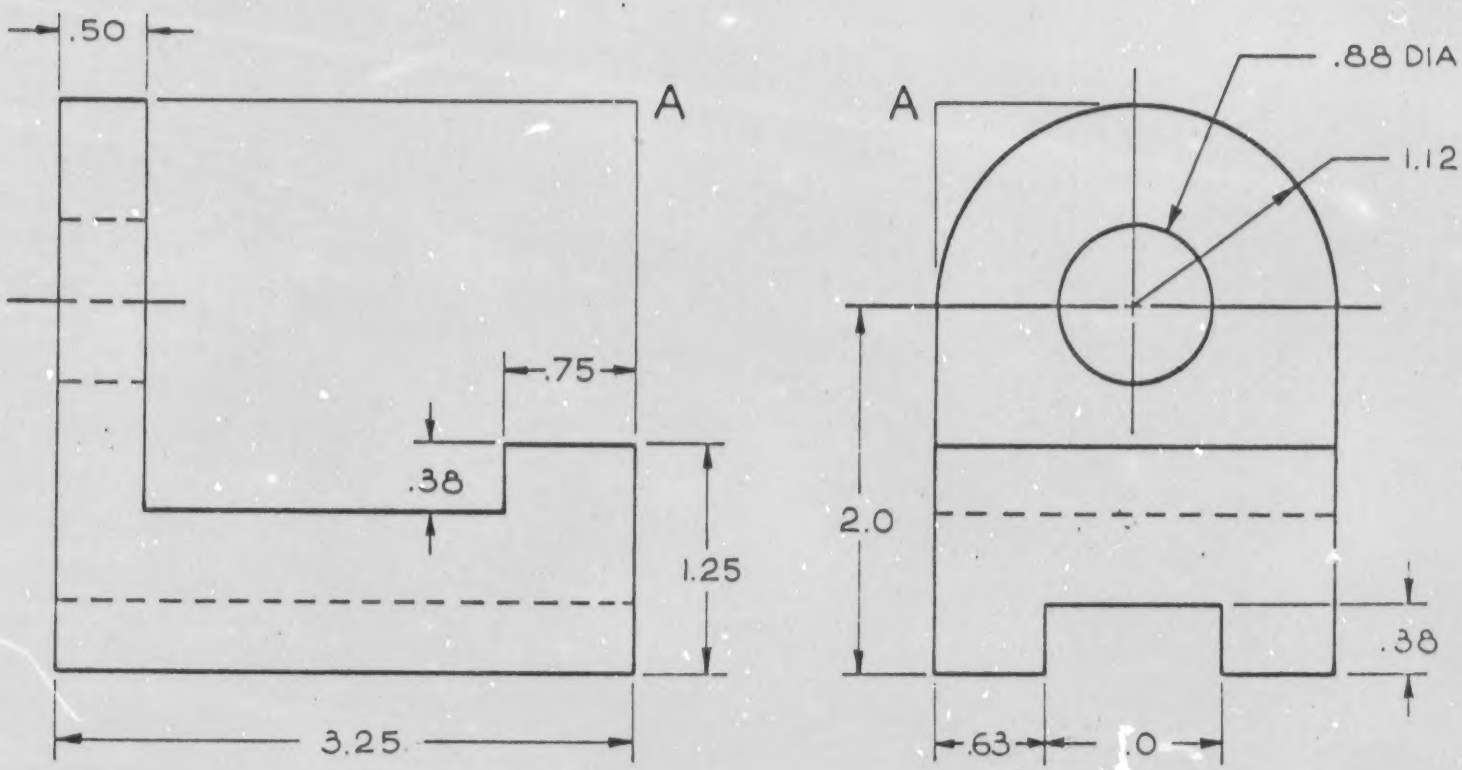

ROD GUIDE

DRAFTING
COMPETENCY NO. 9
Figure 9-2

BATHROOM CABINET

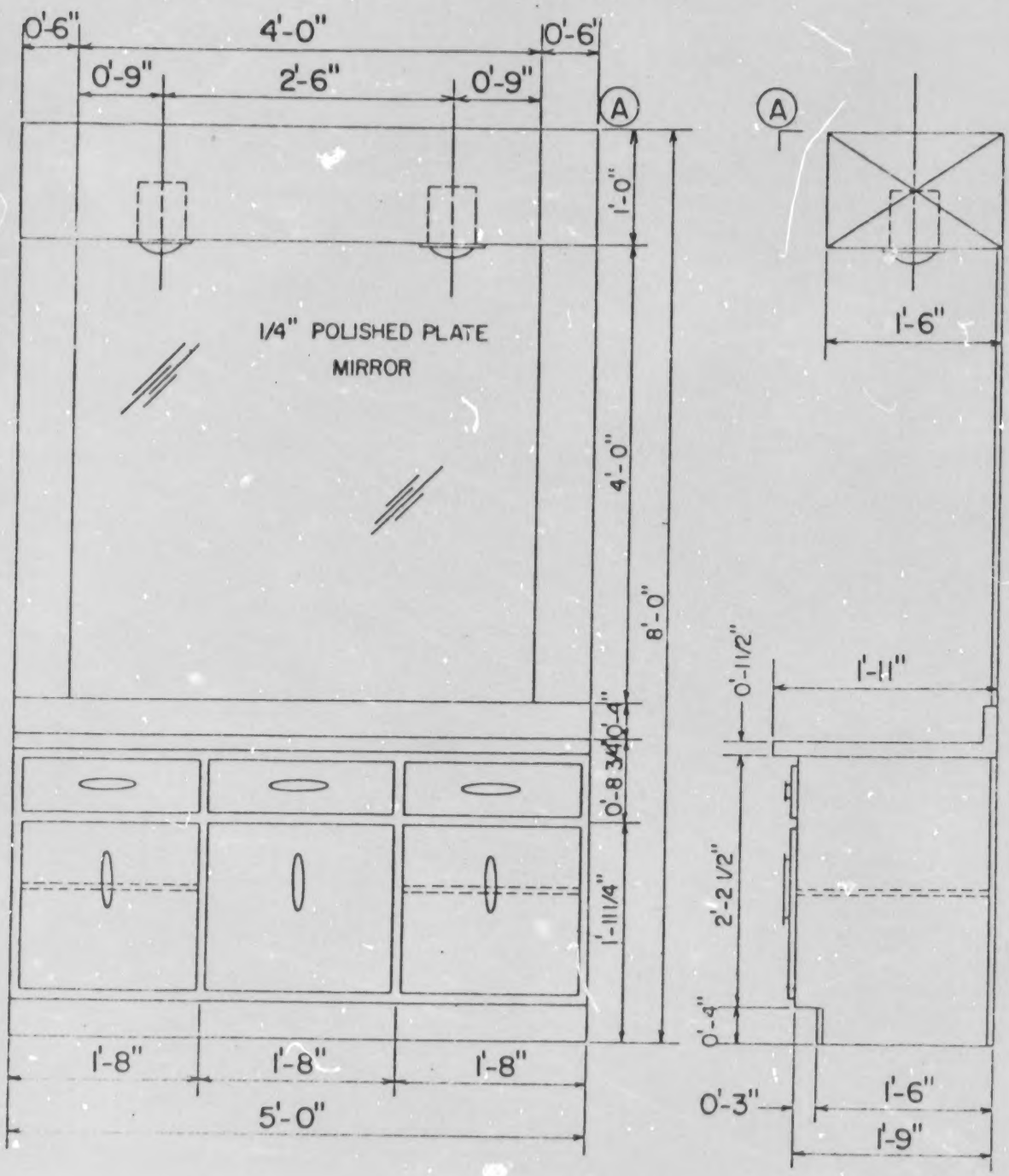

DRAFTING

COMPETENCY NO. 9

Figure 9-3

OFFICE DESK

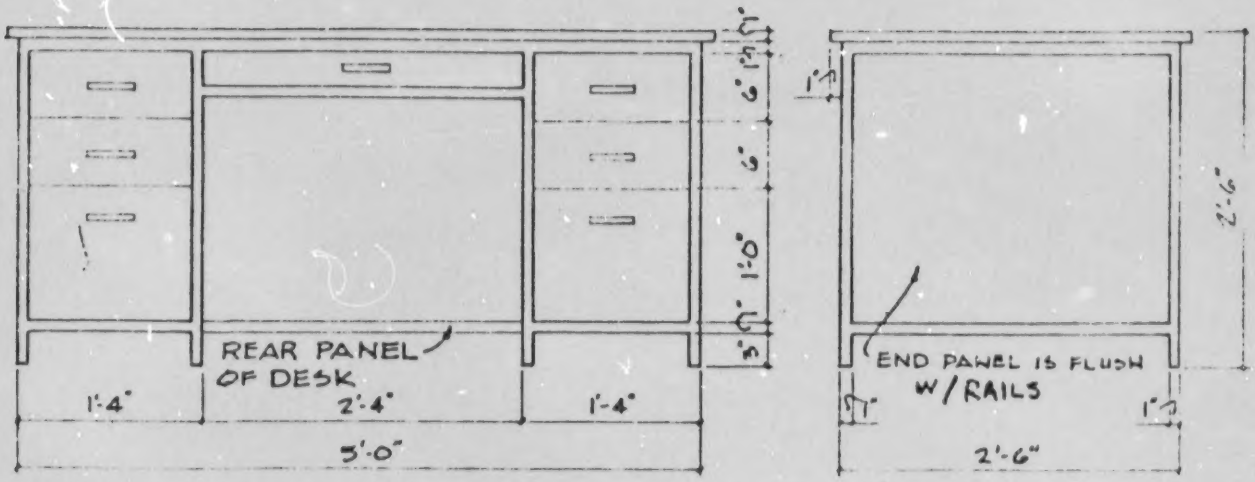

BEST COPY AVAILABLE

DRAFTING
COMPETENCY NO. 9
Figure 9-4

CENTERING ISOMETRIC AND OBLIQUE DRAWINGS

CENTERING AN ISOMETRIC DRAWING

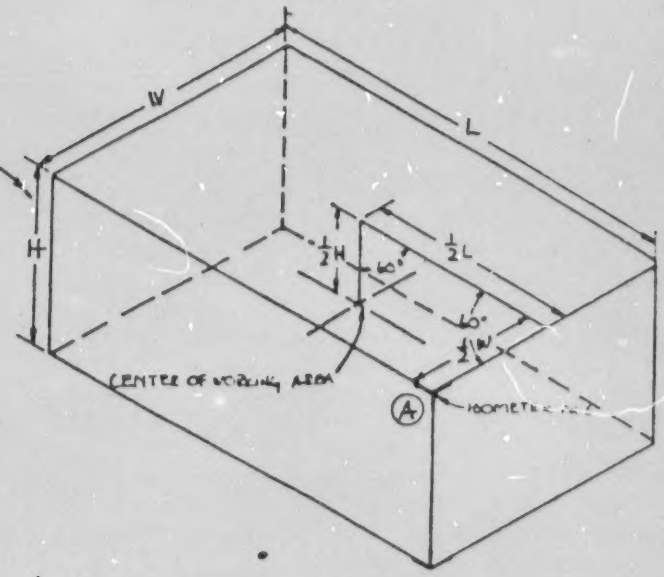

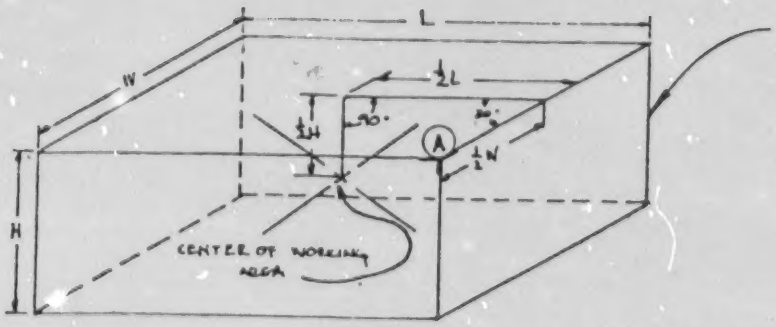

CENTERING AN OBLIQUE DRAWING

Figure 9-4 (cont.)

ISOMETRIC

First find the center of the working area. Then measure up one-half the height of the object to be drawn. Then construct a 60 degree angle. Measure one-half the length and again make a 60 degree angle. Measure one-half the width to the point of isometric axis (A). This is the starting corner.

OBLIQUE

Again, find the center of the working area. Then measure up one-half the height to be drawn. Measure across one-half the length. At a 30 degree angle, draw a line and measure down one-half the width from this point (A), construct the oblique drawing. This is the starting corner. On a cabinet oblique drawing reduce the width dimension by one-half.

DRAFTING

COMPETENCY NO. 10

TASK:

To trace in ink a detail drawing.

CONDITIONS AND LIMITATIONS:

Given the necessary tools and equipment, including film, mylar or vellum, the student will trace in ink the drawing completed in Competency No. 6C, or a similar detail drawing. All numbers and letters to be freehand and in ink. Line weight is to be according to the alphabet of lines and be reproducible. Task to be completed in two hours.

CRITERIA OF ACCEPTABLE PERFORMANCE:

1. All line weight according to ANSI Y14.2M and be reproducible.
2. Corners to meet and not overlap.
3. Arcs to be tangent to lines.
4. The drawing to be free of ink smears.
5. Letters and numbers according to ANSI Y14.2M.
6. Task to be completed within the time limit.

MACHINE DRAFTING

COMPETENCY NO. 11

TASK:

To draw threads, fasteners and springs

GENERAL CONDITIONS AND LIMITATIONS:

Given the necessary tools, equipment, tracing paper and a sheet layout (Figure 1-1), the student will draw the following and include all notes: Figure 11-1A, B, C, D. All lines to be according to the alphabet of lines and reproducible. Construction lines to be non-reproducible (blue NON-print lead may be used). References such as Machinery's Handbook, ANSI and Vendor's Catalogs may be used.

GENERAL CRITERIA OF ACCEPTABLE PERFORMANCE:

1. Sheet layout according to Figure 1-1.

2. Lines to conform to alphabet of lines as specified in ANSI Y14.2M-3 and reproducible. Construction lines non-reproducible.

3. Letters and numbers according to ANSI Y14.2M-6.

4. Notes included as specified.

A. External and Internal Threads, both Left and Right Hand

CONDITIONS AND LIMITATIONS: (Note: Equivalent conditions may be used)

Given Figure 11-1A and B, the student will draw the following threads.

1. A sharp-V left hand thread showing external, end, and internal views using the detail method.

2. An external, end, and internal views using the schematic method.

3. An Acme external thread with end view using the detail method.

4. A square external thread with end view using the detail method.

The task is to be completed within four hours.

CRITERIA OF ACCEPTABLE PERFORMANCE:

1. All general criteria to be met.

2. Layout and threads drawn according to directions in Figure 11-1 A and B.

3. Thread representation according to ANSI Y14.6.

COMPETENCY NO. 11 (Cont.)

CRITERIA OF ACCEPTABLE PERFORMANCE: (Cont.)

4. Task to be completed within time limit.

B. Fasteners

CONDITIONS AND LIMITATIONS: (Note: Equivalent criteria may be used)

Given Figure 11-1C and D the student will draw the following fasteners and include notes:

1. A hex-head bolt using the detail method.
2. A square head bolt using the simplified method.
3. Cap, hex socket head using the schematic method.
4. Cap, round head, using the schematic method.
5. Set, hex socket head/cup point, using the schematic method.

The task is to be completed within three hours.

CRITERIA OF ACCEPTABLE PERFORMANCE:

1. All general criteria to be met.
2. Layout and threads drawn according to directions in Figure 11-1C and D.
3. Threads representation according to ANSI Y14.6.
4. Task to be completed within the time limit.

C. Springs

CONDITIONS AND LIMITATIONS: (Note: Equivalent criteria may be used)

Given Figure 11-1D, the student will draw the following springs and include notes:

1. A compression spring using the schematic method.
2. An extension spring using the schematic method.

The task is to be completed within one hour.

COMPETENCY NO. 11 (Cont.)

CRITERIA OF ACCEPTABLE PERFORMANCE:

1. All general criteria to be met.
2. Layout and springs drawn according to directions in Figure 11-1.
3. Spring representation according to ANSI Y14.13.
4. Task to be completed within time limit.

Figure 11-1

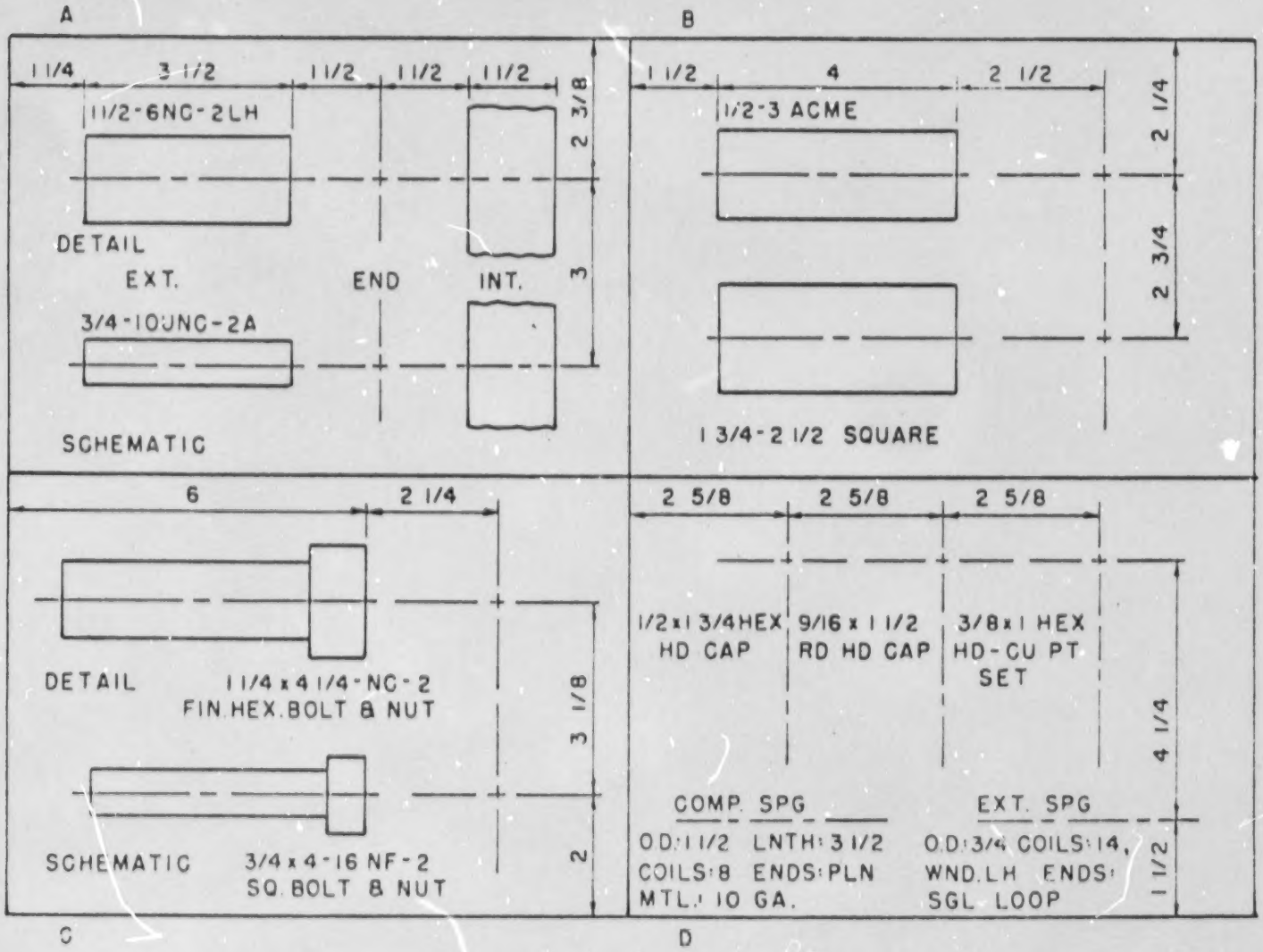

LAYOUT FOR – A SIZE

MACHINE DRAFTING

COMPETENCY NO. 12

TASK:

To draw the graphic charts

GENERAL CONDITIONS AND LIMITATIONS:

Given the necessary tools, equipment (including a mechanical lettering set and reservoir pens), tracing paper and sheet layout (Figure 1-1), the student will center and draw the following graphic charts Ink all lines according to the alphabet of lines and be reproducible. Construction lines to be non-reproducible. All lettering to be done in ink with mechanical lettering set. Title letters should be approximately 1/4" high. All other letter heights should be approximately 1/8". All work to be completed without references. Each task to be completed within 1-1/2 hours.

GENERAL CRITERIA OF ACCEPTABLE PERFORMANCE:

1. Sheet layout according to Figure 1-1.

2. Lines to conform to alphabet of lines as specified in ANSI Y14.2M. producible. Construction lines to be non-reproducible.

3. Charts to be centered on sheet (±1/8").

4. Letter and word spacing to be according to ANSI Y14.2M.

5. A construction line drawn along the base of each line of lettering to touch the bottom of each letter.

6. Letter height to agree with instructions.

7. Tasks to be completed within time limit.

A. Line Chart

CONDITIONS AND LIMITATIONS: (Note: Equivalent criteria may be used)

The student will draw a line chart showing the average Fahrenheit temperature for the months listed below. Degrees shown vertically at 5° increments. Title of chart to be "Average Monthly Temperature".

January - 4°	May +67°	September +63°
February +17°	June +75°	October +54°
March +38°	July +86°	November +38°
April +54°	August +81°	December +11°

COMPETENCY NO. 12 (Cont.)

CRITERIA OF ACCEPTABLE PERFORMANCE:

1. General criteria to be met.
2. Chart to agree with given information (± 1/64").
3. Months shown horizontally across bottom of chart.
4. Degrees shown vertically in 5° increments along left side of chart.

B. Bar Chart

CONDITIONS AND LIMITATIONS: (Note: Equivalent criteria may be used)

The student will draw a bar chart showing the comparison of the weight per cubic inch in pounds of the following metals:

aluminum .101	cast iron .256	platinum .773
copper .322	lead .411	nickel .315
gold .700	magnesium .062	steel .280

Bars to be of uniform width and will equal spacing between bars. Vertical increments to be of ½" equals .10 pounds. Show weight of each metal above each corresponding bar. Title of chart to be "Weights of Common Metals".

CRITERIA OF ACCEPTABLE PERFORMANCE:

1. General criteria to be met.
2. Width and spacing of bars to be uniform (± 1/64").
3. Type of metals shown horizontally along bottom of chart.
4. Weight shown vertically along left side in increments of ½" equals .10 pounds.
5. Weight of each metal shown at top of each corresponding bar.

C. Pie Chart

CONDITIONS AND LIMITATIONS: (Note: Equivalent criteria may be used)

The student will draw a 6" diameter pie chart showing the budgeting of monthly expenditures as follows:

COMPETENCY NO. 12 (Cont.)

CONDITIONS AND LIMITATIONS: (Cont.)

school lunch $25	clothes $11
supplies $5	savings $4
recreation $20	

Make the pie chart showing the distribution in percentages. The title of the chart to be "Student Expenses".

CRITERIA OF ACCEPTABLE PERFORMANCE:

1. General criteria to be met.

2. Each pie segment to be labeled with name and percentage and agree with given information (± 2%).

D. Organizational Chart

CONDITIONS AND LIMITATIONS: (Note: Equivalent criteria may be used)

The student will draw an organizational chart showing the following company structure.

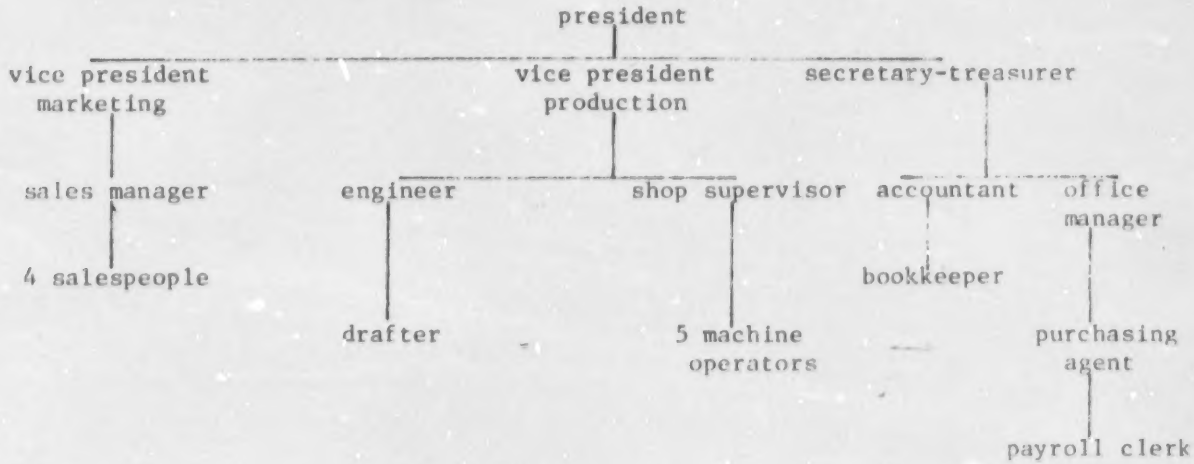

The names of each position will be lettered inside of a rectangle box, and a box provided for each individual. Solid lines will connect each box to the next echelon of office.

MACHINE DRAFTING

COMPETENCY NO. 12 (Cont.)

CRITERIA OF ACCEPTABLE PERFORMANCE:

1. General criteria to be met.

2. Connection of boxes with solid line and lettering in boxes to agree with given information.

3. Sales people and machine operators shown separately and on the same echelon level.

MACHINE DRAFTING

COMPETENCY NO. 13

TASK:

To calculate tolerances and fits

CONDITIONS AND LIMITATIONS: (Note: Equivalent criteria may be used)

Given Machinery's Handbook, a calculator, and a sheet of ruled paper, the student will calculate and write tolerance information based on the given information:

1. Write 18¼" ± .02 as a limit dimension.

2. Write 1.875-1.879 as a bilateral tolerance dimension.

3. Using USA Standard Fits tables and the basic hole system, calculate limit dimensions for the shaft and for hole for the following:

   a. Class RC 3 fit - 1-3/8" diameter
   b. Class LT 5 fit - 3/4" diameter
   c. Class LC 10 fit - 2-1/8" diameter
   d. Class LN 3 fit - 7-9/16" diameter
   e. Class FN 4 fit - .636" diameter

4. Using USA Standard Fits tables, show the minimum and maximum clearance, interference, or transition between the shaft and the hole for the following fits:

   a. Class RC 4 fit - 9/32" diameter
   b. Class LC 3 fit - 1-7/8" diameter
   c. Class LT 4 fit - 2-1/16" diameter
   d. Class LN 2 fit - 15/16" diameter

5. Task to be completed within one hour.

CRITERIA OF ACCEPTABLE PERFORMANCE:

1. Tolerance information to be given with 100% accuracy.

2. Limit dimensions according to ANSI Y14.5-2.2.

3. Task to be completed within time limit.

MACHINE DRAFTING

COMPETENCY NO. 14

TASK:

To draw and construct models of developments and intersections.

GENERAL CONDITIONS AND LIMITATIONS:

Given the necessary tools, equipment and oaktag or similar material, the student will draw and construct the following developments and intersections: (Figures 14-1, 14-2, 14-3). Tabs to be ¼" wide. All work is to be completed without references. Tasks to be completed within 4 hours.

GENERAL CRITERIA OF ACCEPTABLE PERFORMANCE:

1. Measurements on the flat pattern to be ± 1/64".

2. Tasks to be completed with time limit.

A. Truncated Right Prism

CONDITIONS AND LIMITATIONS: (Note: Equivalent criteria may be used)

Given a dimensioned isometric drawing of a mail box (Figure 14-1), the student will draw the flat pattern using the parallel line method and construct a model of the mail box.

CRITERIA OF ACCEPTABLE PERFORMANCE:

1. General criteria to be met.

2. Corner bends to be 90° (± 5°).

B. Intersection of Two Cylinders at Right Angles

CONDITIONS AND LIMITATIONS: (Note: Equivalent criteria may be used)

Given a dimensioned isometric drawing of the intersected cylinders (Figure 14-2), the student will draw the necessary patterns and construct a model.

CRITERIA OF ACCEPTABLE PERFORMANCE:

1. General criteria to be met.

2. Intersections to be smooth and without voids.

COMPETENCY NO. 14 (Cont.)

CRITERIA OF ACCPETABLE PERFORMANCE (Cont.)

C. Transition Piece of a Rectangular To a Round

CONDITIONS AND LIMITATIONS: (Note: Equivalent criteria may be used)

Given a dimensioned drawing of the transition piece (Figure 14-3), the student will draw the necessary patterns and construct a model.

CRITERIA OF ACCEPTABLE PERFORMANCE:

1. General criteria to be met.

MACHINE DRAFTING

COMPETENCY NO. 14

Figure 14-1

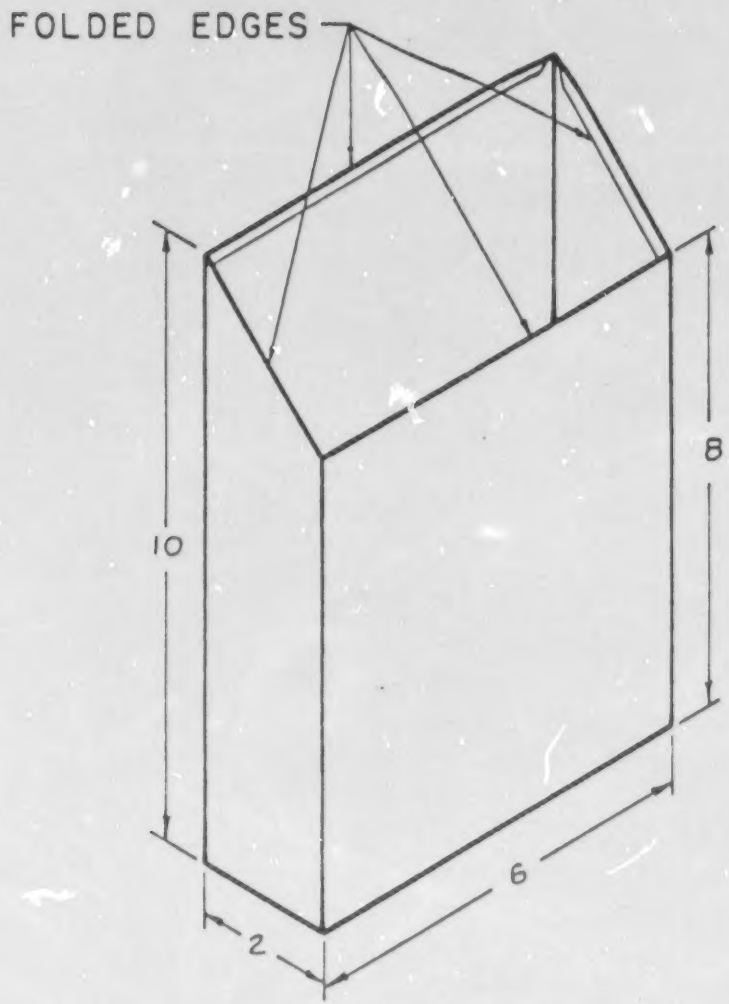

#20 U.S. STD. GAGE

COMPETENCY NO. 14

Figure 14-2

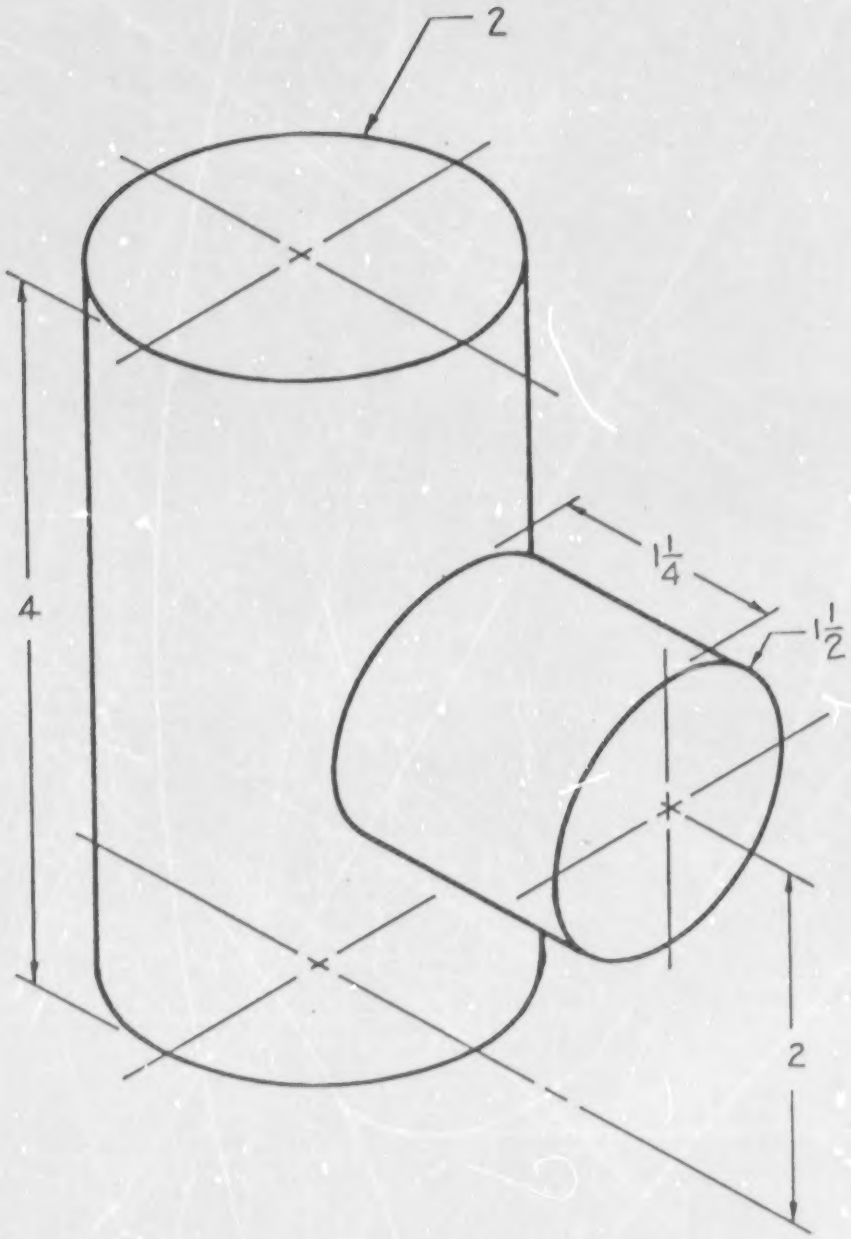

COMPETENCY NO. 14

Figure 14-3

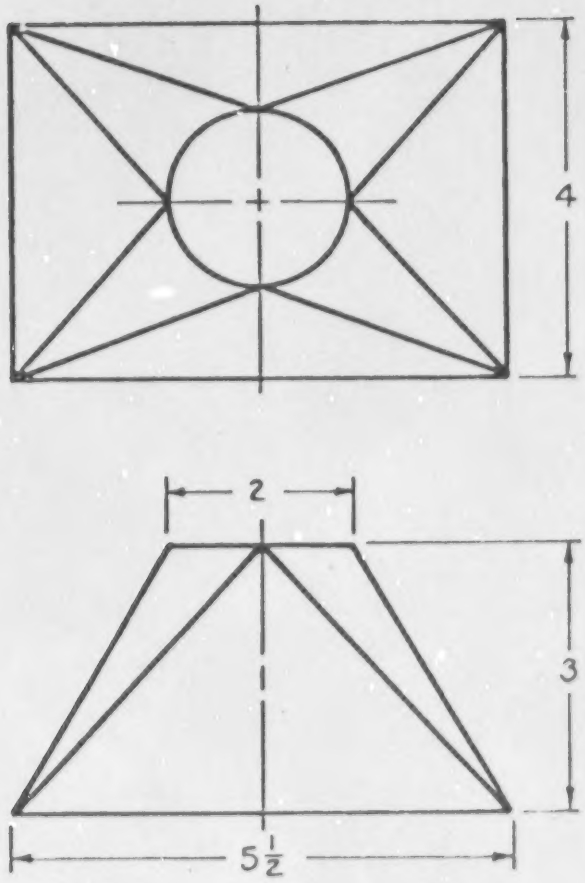

MACHINE DRAFTING

COMPETENCY NO. 15

TASK:

To complete a plate cam profile drawing

CONDITIONS AND LIMITATIONS: (Note: Equivalent criteria may be used)

Given the necessary tools, equipment, tracing paper, sheet layout (Figure 1-1), and the following information:

scale: 1 = 1
follower: 3/4" dia. roller
cam rotation: clockwise
base circle: 3" dia.
follower motion is:
up 1½" harmonic motion in 120°
dwell 60°
1½" parabolic downward motion in 90°
dwell 90°

The student will draw a displacement diagram and plate cam profile.

All lines to be according to the alphabet of lines and reproducible. Task to be dompleted within two hours.

CRITERIA OF ACCEPTABLE PERFORMANCE:

1. Lines to conform to the alphabet of lines as specified in ANSI Y14.2M. and reproducible.

2. Letters and numbers to be according to ANSI Y14.2M.

3. Measurements to be ± 1/64".

4. Corners to meet but not overlap.

5. Displacement diagram to be shown and conform to given information (± 1/64").

6. Cam profile to conform to displacement diagram (± 1/64").

7. Task to be completed within time limit.

MACHINE DRAFTING

COMPETENCY NO. 16

TASK:

To complete gear drawings

GENERAL CONDITIONS AND LIMITATIONS:

Given the necessary tools, equipment, tracing paper, sheet layout, (see Figure 1-1) and calculator, the student will draw an orthographic projection of the following gears. All lines to be according to the alphabet of lines and reproducible. References such as Machinery's Handbook and Vendor's catalogs may be used. Each drawing will be completed within four hours.

GENERAL CRITERIA OF ACCEPTABLE PERFORMANCE:

1. Sheet layout according to Figure 1-1.
2. Lines to conform to alphabet of lines as specified in ANSI Y14.2M and reproducible.
3. Views to be placed in standard orthographic projection and include all necessary lines.
4. Letters and numbers to be according to ANSI Y14.2M.
5. Measurements to be ± 1/64".
6. Corners to meet but not overlap.
7. Arcs to be tangent to lines.
8. Task to be completed within time limit.

A. Spur Gear

CONDITIONS AND LIMITATIONS: (Note: Equivalent criteria may be used)

Given the following information:

Scale: 1 = 1	style of gear: ½" thick web
Tooth form: 14½° standard involute	bore diameter: 1-1/8" tol. ± .005
pitch diameter: 11"	hub length: 1½ times bore diameter
diametrial pitch: 8	material: 1040 steel
width of face: 1"	number required: 3
	keyway for ¼" square key

COMPETENCY NO. 16 (Cont.)

CONDITIONS AND LIMITATIONS: (Cont.)

The student will draw a front and sectional view of the spur gear. Dimensions will be shown. Cutting data for gear fabrication will be calculated and shown on the drawing. Three teeth of the gear will be shown in the front view.

CRITERIA OF ACCEPTABLE PERFORMANCE:

1. General criteria to be met.
2. Cutting data given and calculated (tolerance ± .002) to be shown and to conform to ANSI Y14.7.
3. Three teeth of the gear are shown in the front view.
4. Dimensions and views on the drawing will agree with given information.
5. Dimensions to be according to ANSI Y14.5.
6. Keyway is dimensioned according to ANSI Y14.5.

B. Straight Bevel Gear and Pinion

CONDITIONS AND LIMITATIONS: (Note: Equivalent criteria may be used)

Given the following information:

Scale: 1 = 1 tooth form: 20° standard involute shaft angle: 90°

Gear Data	Pinion Data
diametral pitch: 10	diametral pitch: 10
material: cast iron	material: cast iron
number required: 2	number required: 2
bore diameter: ½" ± .005	bore diameter: ½" ± .005
Pitch diameter: 3.000	pitch diameter: 2.000
style pf gear: solid	style of pinion: solid
face width: 2 times circular pitch	face of width: same as for gear
keyway: none	keyway: none
hub: 1½" dia. x 3/4" long	hub: 1" dia. x 3/4" long

The student will draw a sectional view of an assembled bevel gear and pinion. Dimensions will be shown. Cutting data for gear and pinion fabrication will be calculated and shown on the drawing. No teeth will be shown.

COMPETENCY NO. 16 (Cont.)

CRITERIA OF ACCEPTABLE PERFORMANCE:

1. General criteria to be met.

2. Minimum cutting data, given and calculated, (tolerance ± .002) to be shown on the drawing for the gear and pinion will be:

   a. number of teeth

   b. diametral pitch

   c. pressure angle

   d. pitch diameter

   e. addendum

   f. dedendum

   g. whole depth

   h. chordal thickness

   i. cone distance

3. Calculated cutting data to be ± .002.

4. Dimensions shown on the drawing will agree with given and calculated information and be according to ANSI Y14.7.

5. View on the drawing is a sectioned assembled view of gear and pinion.

MACHINE DRAFTING

COMPETENCY NO. 17

TASK:

To complete production drawings

GENERAL CONDITIONS AND LIMITATIONS:

Given the necessary tools, equipment, tracing paper and a sheet layout (Figure 1-1), the student will center and draw to full scale the following production drawings: Figures 17-1 and 17-2. All lines according to the alphabet of lines and reproducible.

GENERAL CRITERIA OF ACCEPTABLE PERFORMANCE:

1. Sheet layout according to Figure 1-1.

2. Lines to conform to alphabet of lines as specified in ANSI Y14.2M. and reproducible. Construction lines non-reproducible. (Blue non-print lead may be used).

3. Top and bottom margin between views and border line to be equal (± ¼").

4. Left and right margin between views and border lines to be equal (± ¼").

5. Letters and numbers according to ANSI Y14.2M.

6. Corners to meet and not overlap.

7. Arcs to be tangent to lines (no tolerance).

8. Measurements to be ± 1/64".

A. Machine Assembly

CONDITIONS AND LIMITATIONS: (Note: Equivalent criteria may be used)

Given a tool post or a dimensioned drawing of a tool post (Figure 17-1), or a similar item the student will draw the necessary machine assembly views. Parts are to be numbered and a parts list is to be included (Figure 1-1). Task to be completed within three hours. All work to be completed without references.

COMPETENCY NO. 17 (Cont.)

CRITERIA OF ACCEPTABLE PERFORMANCE:

1. General criteria to be met.

2. Necessary views to be front and top with parts shown assembled.

3. If section lining is used in broken-out areas, show as specified according to ANSI Y14.2M and Y14.3.

4. Numbering in parts list to agree with numbering on the drawing.

5. Task to be completed within the time limit.

B. Detail Drawings

CONDITIONS AND LIMITATIONS: (Note: Equivalent criteria may be used)

Given a tool post or a dimensioned drawing of a tool post (Figure 17-1), or a similar item, the student will draw necessary detail drawings. Dimensions and notes will be included. Task to be completed within 4 hours. All work to be completed without references.

CRITERIA OF ACCEPTABLE PERFORMANCE:

1. General criteria to be met.

2. Measurement to be $\pm$ 1/64".

3. The necessary views of each part of the tool post will be top and front.

4. Dimensions and notes necessary for fabrication will be shown.

5. Dimensioning according to ANSI Y14.5 .

6. Task to be completed within the time limit.

C. Welding Assembly

CONDITIONS AND LIMITATIONS: (Note: Equivalent criteria may be used)

Given a dimensioned drawing of a lever arm (Figure 17-2) or a similar item, the student will draw a welding assembly drawing. All dimensions and weld symbols to be shown. Tasks to be completed within three hours. References may be used.

MACHINE DRAFTING

COMPETENCY NO. 17 (Cont.)

CRITERIA OF ACCEPTABLE PERFORMANCE:

1. General criteria to be met.
2. Measurements to be ± 1/64".
3. Necessary views of the lever arm will be the front and top.
4. Dimensions, notes and welds necessary for fabrication are to be shown.
5. Dimensioning according to ANSI Y14.5.
6. Welding symbols according to AWS A2.0-58.
7. Task to be completed within the time limit.

MACHINE DRAFTING

COMPETENCY NO. 17
Figure 17-1

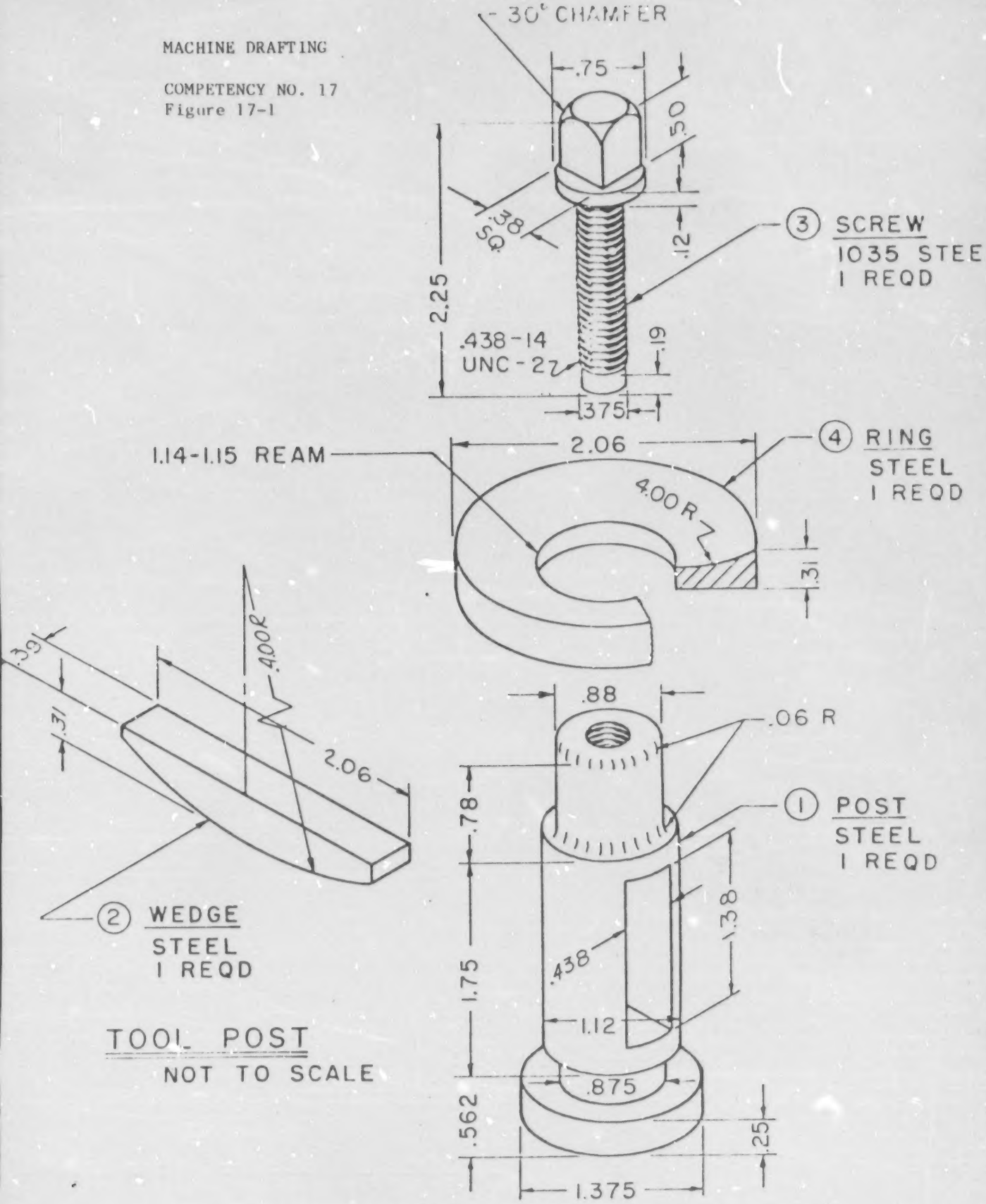

MACHINE DRAFTING

COMPETENCY NO. 17
Figure 17-2

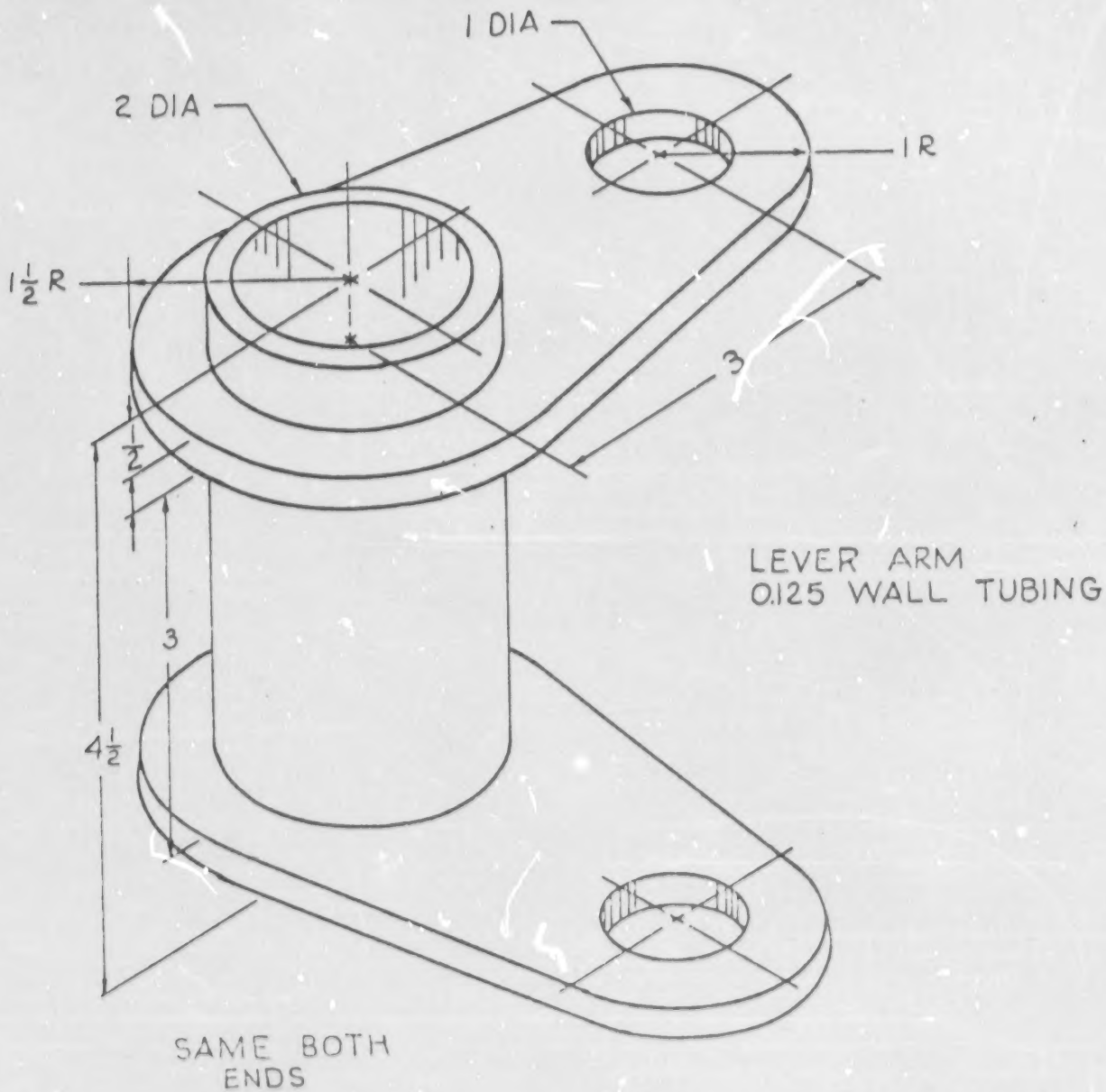

MACHINE DRAFTING

COMPETENCY NO. 18

TASK:

To complete a technical illustration

CONDITIONS AND LIMITATIONS: (Note: Equivalent criteria may be used)

Given a c-clamp or a dimensioned drawing of a c-clamp (Figure 18-1) or a similar item, the necessary tools and equipment, including a mechanical lettering set, tracing paper and sheet layout (Figure 1-1) the student will center (Figure 9-4) and draw an exploded isometric technical illustration. All lines in ink to be according to the alphabet of lines and reproducible. Construction lines non-reproducible. Complete all lettering in ink with mechanical lettering set. All parts are to be shaded using the following shading techniques: stippling and press-on for the castings and lines for machined parts (air brush is acceptable). Task to be completed in four hours All work to be completed without references.

CRITERIA OF ACCEPTABLE PERFORMANCE:

1. Sheet layout according to Figure 1-1.
2. Parts to be centered in field of drawing and aligned to show assembly (± 1/8").
3. All line weight according to ANSI Y14.2M, in ink, and reproducible.
4. Circles and arcs to be isometric circles and arcs on the drawing.
5. Corners to meet and not overlap.
6. Letters and numbers according to ANSI Y14.2M and completed mechanically.
7. Castings to be press-on and stipple shaded. Machined parts to be line shaded. (air brush is acceptable for castings and/or machined parts).
8. The sides nearest the light have the lightest shading and those opposite have the darkest shading.
9. Measurements to be ± 1/64".
10. Task to be completed within the time limit.

MACHINE DRAFTING
COMPETENCY NO. 18
Figure 18-1

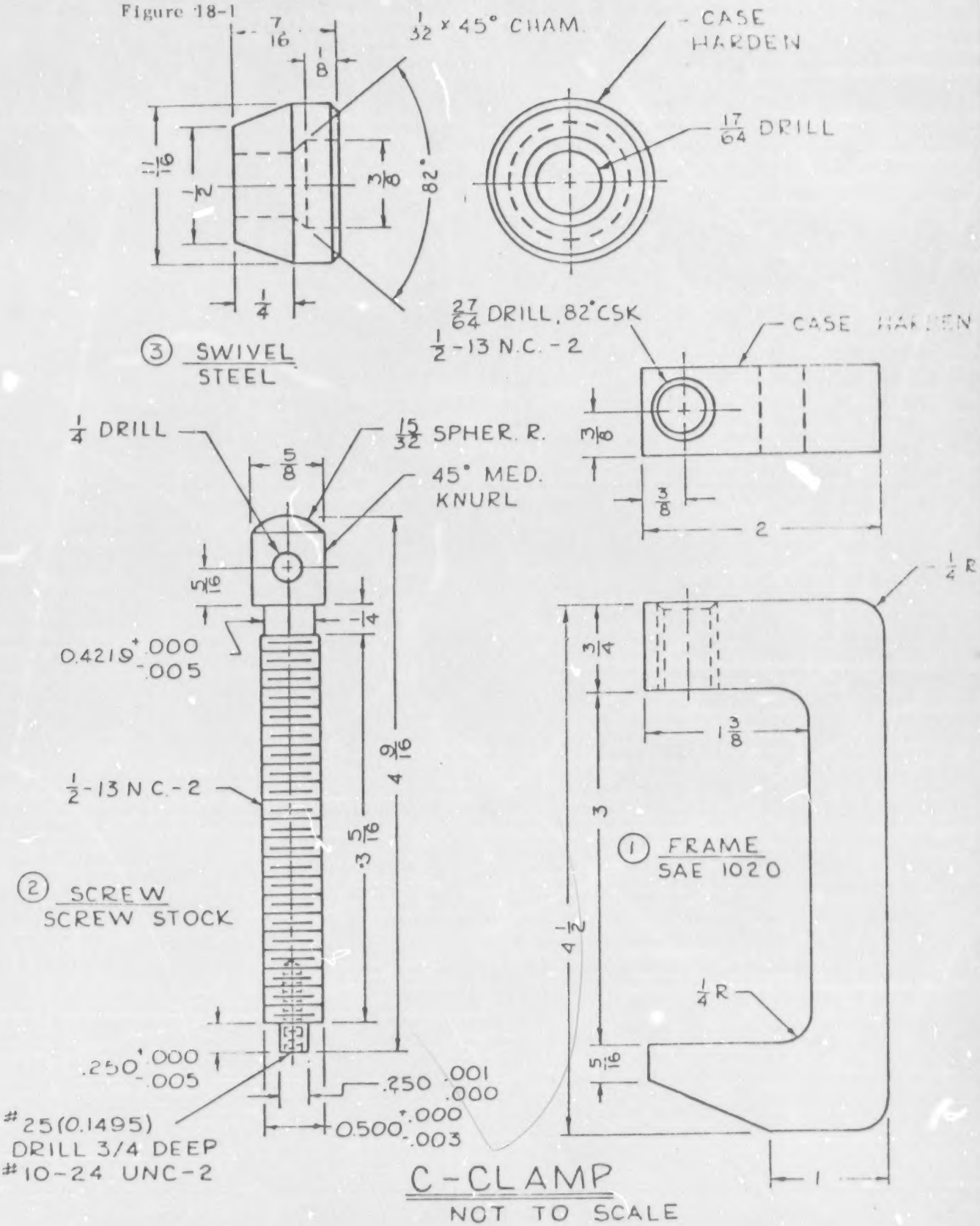

C-CLAMP
NOT TO SCALE

BEST COPY AVAILABLE

COMPETENCIES 19-27
DESIGN AND DRAWING SPECIFICATIONS

All drawings in competencies 19-27 must be for the same residence and comply with the following design and drawing specifications.

DESIGN AND DRAWING SPECIFICATIONS:

1. The design must include:

   a. The lot size to be from 60' x 150' to 90' x 150' with a minimum slope of 0' to a maximum slope of 6'.

   b. Square footage to be from 1000 sq. ft. to 1600 sq. ft. on the main levels.

   c. Rooms for a family of 4 with one boy and one girl.

   d. An attached garage.

   e. Hip, gable or shed roof style.

   f. At least one fireplace.

   g. A basement.

2. The design and the working drawings must comply with the local building code and HUD minimum standards.

3. All drawing sheets within the set of working drawings must be on tracing paper (mylar or film), of the same size and consistent with the sheet layout in Figure 1-1.

4. Corners, dimension lines, etc., must consistently either meet or overlap. If overlapping is used, all overlaps must be consistent in length.

5. All lineweight and lettering in the set of drawings must be done with lead, or equivalent media. The only exceptions to this will be the border lines, title blocks and schedule outlines. Schedule headings, drawing titles and title block information may be lettered mechanically.

6. Lines to conform to the alphabet of lines as specified in ANSI Y14 2M and be reproducible. Construction lines non-reproducible. (Blue non-print lead may be used.)

7. Letters and numbers to be an extended Architectural style of consistent height and in accordance with any standard architectural drafting text.

8. All dimensions to be consistent in all drawings using the aligned system of dimensioning.

9. Drafting procedures to be according to any standard drafting textbook.

COMPETENCY NO. 19-27
Figure 19-1

OUTLINE SPECIFICATIONS FOR A NEW RESIDENCE

These specifications are a brief outline of the construction features and materials to be used in the proposed new residence. Their intent is to be a guide for the development of the working drawing and are not intended to be used as construction specifications.

1. FOUNDATIONS: Exterior foundation walls to be 10" concrete masonry units. 12 courses.

   Interior bearing walls to be 2 x 4 stud walls on 4" concrete masonry units. 1 course.

   Garage foundation walls to be 8" concrete masonry units. 5 courses.

   All foundations to be centered on concrete, cast in place, spread footings reinforced with 2 #4 re-bars.

2. ROUGH FRAMING: Floor joists to be 2 x 10 on concrete foundation walls and 2 x 4 stud bearing walls. Frame walls to be 2 x 4 stud. Ceiling joists and rafters to be 2 x 6's. All members spaced 16" o.c. except rafters to be 24" o.c.

3. WALLS: Exterior Walls to have ½" sheathing and plywood siding on the outside and ½" gypsum board on the inside.

   Interior walls to be ½" gypsum boxed on each side.

4. FLOORS: Flooring to be ½" C-DX (32/16) plywood subfloors with 5/8" underlayment. All first level floor covering to be carpet, except kitchen, baths, and entries. Sheet vinyl to be on basement and garage floors and all exterior concrete slabs to be 4" concrete with 6 x 6-10-10 mesh.

5. ROOF: Shingles to be 255# asphalt over 1/2" C-DX (32/16) plywood sheathing.

OUTLINE SPECIFICATIONS FOR A NEW RESIDENCE (CONT'D)

6.	WINDOWS:	Windows to be Anderson primed wood casement, triple glazed, and Anderson basement sash double glazed.
7.	DOORS	Garage doors to be 9'x 7', 5 sections O.H. panel and glass. Exterior doors to be metal clad insulating doors with storm panels. Interior doors to be 1 3/4" H.C.flush oak doors.
8.	KITCHEN:	Cabinets to be Haas Federal Oak units with custom plastic laminated counter tops. Dishwasher, range and hood, sink and disposal to be included with the house.
9.	BATH:	Built in vanities to be Haas Classic White units with custom plastic laminated counter tops. Water closets to be vitrous china, tubs to be enameled cast iron and shower in Master Bath to be fiberglass.
10.	AIR CONDITIONING:	Heating and cooling systems to be gas fired, forced air with electric compressor in rear of house.
11.	INSULATION:	3½" thick fiberglass batt insulation to be used in exterior walls of both house and garage. Two layers of 6½" to be used in the ceiling. A plastic film vapor barrier to be used on the warm side of all insulated walls.
12.	PLUMBING:	Waste and vent lines to be PVC and water lines to be copper.
13.	ELECTRICAL:	Electrical service to be 200 amp. with underground entrance.
14.	BUILDING CODE:	All drawings and construction to comply with the Uniform Building Code.

ARCHITECTURAL DRAFTING

COMPETENCY NO. 19

TASK:

To draw plan views.

GENERAL CONDITIONS AND LIMITATIONS:

Given the necessary tools and equipment, the student will lay out and draw, scale ¼" = 1'-0", the following plan views. The drawings will be dimensioned, referenced for sectional drawings, show the necessary material symbols, be titled and contain notes and information needed by the builder for construction. References may be used. No time limit. Design and drawing specifications to be used.

GENERAL CRITERIA OF ACCEPTABLE PERFORMANCE:

1. All design and drawing specifications to be met.
2. All measurements to be ± 1½" on the scale ¼" = 1'-0".
3. All location and size dimensions necessary for construction to be shown, using the aligned system of dimensioning.
4. Wall center line, frame wall, or finish wall dimensioning to be used.
5. General notes and specifications to be shown above the title block.
6. Specific notes and other information to be shown at the location where they occur.
7. Cutting plane lines and detail callouts to be shown, and will agree with sectional views and details to be drawn.
8. All material symbols according to the Architectural Graphic Standards or Time Saver Standards.
9. Title and scale to be shown.

A. Floor Plans

CONDITIONS AND LIMITATIONS:

The student will draw working drawing floor plans for all levels including the basement.

CRITERIA OF ACCEPTABLE PERFORMANCE:

1. All general criteria to be met.
2. All walls, finished openings, windows and door symbols to be shown.
3. Window and door identification callouts to be shown and will agree with schedules to be drawn.
4. Built ins, stairways, plumbing fixtures and all permanent features to be shown.
5. Room names to be shown and will agree with room finish schedule to be drawn.

COMPETENCY NO. 19 (CONTINUED)

B. Footing/Foundation Plan

CONDITIONS AND LIMITATIONS:

The student will draw the footing/foundation plan showing all load bearing surfaces.

CRITERIA OF ACCEPTABLE PERFORMANCE:

1. General criteria to be met.

2. Elevations to top of footings and foundation wall to be shown and agree with the site plan to be drawn.

3. Plan to be dimensioned to bearing surfaces, not footings.

4. Footing and foundation wall sizes to be shown.

ARCHITECTURAL DRAFTING

COMPETENCY NO. 20

TASK:

To draw elevations.

GENERAL CONDITIONS AND LIMITATIONS:

Given the necessary tools and equipment the student will lay out and draw the following elevations. The drawings will be dimensioned, symboled, titled and noted with information needed by the builder for construction. References may be used. No time limit. Design and drawing specifications to be used.

GENERAL CRITERIA O. ACCEPTABLE PERFORMANCE:

1. All design and drawing specifications to be met.
2. All size dimensions to be shown.
3. Specific notes and other information indicating materials and parts to be shown at location where they occur.
4. All material symbols according to Architectural Graphic Standards or Time Saver Standards.
5. Title and scale to be shown.

A. Exterior Elevations

CONDITIONS AND LIMITATIONS:

The student will draw the exterior views, a) front-scale ¼" = 1'-0", b) left-scale 1/8" = 1'-0", c) right-scale 1/8" = 1'-0", d) rear-scale 1/8" = 1'-0". The drawings will show the house in its entirety from bottom of footings to top of structure. All below grade construction to be shown with hidden lines. The following must be shown:

1. Elevations of footings, floor and ceiling lines.
2. Dimensions for the top of fireplace flue above ridge.
3. Dimensions of overhang.
4. Roof pitch.

CRITERIA OF ACCEPTABLE PERFORMANCE:

1. All general criteria to be met.
2. All measurements to be ± ½" on the scale ¼" = 1'-0".
3. All measurements to be ± 1" on the scale 1/8" = 1'-0".
4. Construction below grade to be hidden lines.
5. Elevations of the following to be shown:
   a) floor lines, b) ceiling lines, c) footing lines
6. Measurement of top of fireplace flue above ridge and the overhang shown.
7. Roof pitch given.
8. Window and door marks to be shown and agree with floor plan.

COMPETENCY NO. 20 (CONT'D)

B. Interior Elevations

CONDITIONS AND LIMITATONS:

The student will draw, scale ½" = 1'-0", interior views of the following (a) kitchen, (b) bathrooms and (c) fireplace walls. All cabinet shelving and flues to be shown.

CRITERIA OF ACDEPTABLE PERFORMANCE:

1. All general criteria to be met.

2. All measurements to be ± ¼" on the scale ½" = 1'-0".

3. Cabinet shelves and fireplace flues to be shown with hidden lines.

ARCHITECTURAL DRAFTING

COMPETENCY No. 21

TASK:

To complete schedules.

GENERAL CONDITIONS AND LIMITATIONS:

Given the necessary tools and equipment (including film, mylar or vellum), the student will lay out and draw with ink the following schedules. (Figure 21-1). Schedules to include 3.5 additional spaces. References may be used. No time limit. Design and drawing specifications to be used.

GENERAL CRITERIA OF ACCEPTABLE PERFORMANCE:

1. All design and drawing specifications to be met.

2. Schedule layouts according to Figure 21-1.

3. Schedules to be completed with a minimum of 3 additional spaces.

4. Schedules to be free of ink smears.

A. Door Schedule

CONDITIONS AND LIMITATIONS:

The student will lay out and draw a door schedule. The schedule will agree with the floor plans and contain the following information,

1. Door mark
2. Quantity
3. Door type
4. Rough opening
5. Door (width, height and thickness)
6. Manufacturer and catalog number
7. Remarks

CRITERIA OF ACCEPTABLE PERFORMANCE:

1. All general criteria to be met.

2. All data to be listed under the appropriate heading and to agree with floor plans.

COMPETENCY NO. 21 (CONT'D)

B. Window Schedule

The student will lay out and draw a window schedule. The schedule will agree with the floor plans and contain the following information:

1. Window mark
2. Quantity
3. Window type
4. Rough opening
5. Manufacturer and catalog number
6. Remarks

CRITERIA OF ACCEPTABLE PERFORMANCE:

1. All general criteria to be met.
2. All data to be listed under the appropriate heading and to agree with the floor plan.

C. Room Finish Schedule

CONDITIONS AND LIMITATIONS:

The student will lay out and draw a room finish schedule. The schedule will contain the following information.

1. Room name
2. Floor finish material
3. Trim and base material
4. Wall materials
5. Ceiling finish
6. Ceiling height
7. Remarks

CRITERIA OF ACCEPTABLE PERFORMANCE:

1. All general criteria must be met.
2. All data to be listed under the appropriate heading and to agree with floor plans and sections to be drawn.

COMPETENCY NO. 21
FIGURE 21-1

DOOR SCHEDULE								
NO.	QUA.	DOOR TYPE	DOOR SIZE 1/4"			ROUGH OPENING	MFR. & CAT. NO.	REMARKS
			WIDTH	HEIGHT	THICK.			
7/16"	1/2"	1"	3/4"	3/4"	3/4"	1"	1"	1 11/16"
7 7/8"								

WINDOW SCHEDULE					
NO.	QUA.	WINDOW TYPE	ROUGH OPENING	MFR. & CAT. NO.	REMARKS
7/16"	1/2"	2 3/8"	1 3/16"	1 3/16"	2 3/16"

ROOM FINISH SCHEDULE						
ROOM NAME	FLOOR MAT.	WALL MAT. 1/4"	CEILINGS		BASE & TRIM MAT.	REMARKS
			MAT	HGT		
1 1/2"	1 1/2"	1 1/2"	1"	1/2"	1"	1 3/8"

1. Schedule headings to be either 5/32" letters and numbers.

2. Column headings to be 1/8" letters and numbers.

3. Lettering in schedule to be 1/8" letters and numbers, freehand, upper case, vertical, architectural lettering.

4. Outline of schedule to be made with #4 pen, and division lines with #2 pen.

BEST COPY AVAILABLE

ARCHITECTURAL DRAFTING

COMPETENCY No. 22

TASK:

To draw site and landscape plans.

GENERAL CONDITIONS AND LIMITATIONS:

Given the necessary tools and equipment, the student will lay out and draw (scale 1/16" = 1'0" min) the following plans. Drawings will be titled and noted. References may be used. No time limit. Drawing and design specifications to be used.

GENERAL CRITERIA OF ACCEPTABLE PERFORMANCE:

1. All design and drawing specifications to be met.
2. All measurements to be ± 6" on the scale 1/16" = 1'0".
3. Walks and driveways shown.
4. Location of curb and gutter shown.
5. Lot dimensions listed.
6. House number and street name listed.
7. Lot and block number listed.
8. North arrow illustrated.
9. Title and scale to be shown.

A. Site Plan

CONDITIONS AND LIMITATIONS:

The student will layout and draw a site plan. The drawing will be in accordance with HUD Standards: "Architectural Processing and Inspection for Mortgage Insurance #4145" or Architectural Graphic Standards.

CRITERIA OF ACCEPTABLE PERFORMANCE:

1. All general criteria to be met.
2. All setbacks to be shown.
3. All elevations and contours to be shown.
4. All exterior house dimensions listed.
5. All utility hook ups shown.
6. Site plans to be according to HUD Standards: "Architectural Processing and Inspection for Mortgage Insurance #4145" or Architectural Graphic Standards.

ARCHITECTURAL DRAFTING

COMPETENCY NO. 23

TASK:

To draw electrical and mechanical plans.

GENERAL CONDITIONS AND LIMITATIONS:

Given the necessary tools and equipment, the student will lay out and draw, scale ¼" = 1'-0", the following plans. Drawings will be titled, symboled and noted with information needed by the contractor for construction. The student may use floor plan reproducible intermediates (copies) or backgrounds. A symbols legend will be included on all drawings. References may beused. No time limit. Drawing and design specifications to be used.

GENERAL CRITERIA OF ACCEPTABLE PERFORMANCE:

1. All design and drawing specifications to be met.

2. Specific notes and information to be shown at the location where they occur.

3. Legends to be illustrated on drawings.

4. Title and scale to be shown.

A. Electrical Plans

CONDITIONS AND LIMITATIONS:

The student will draw plan views showing the location of all electrical outlets, switches, light fixtures, switch lines and service panels, etc. to be installed by the electrical contractor. HUD specifications to be used.

CRITERIA OF ACCEPTABLE PEKFORMANCE:

1. All general criteria to be met.

2. All switches, outlets, light fixtures and service panels, etc., in accordance with HUD standards.

3. All electrical symbols according to Architectural Graphic Standards or Time Saver Standards.

4. All switch lines to be shown.

COMPETENCY NO. 23 (CONT'D)

B. Plumbing, Heating and Ventilation Plans

CONDITIONS AND LIMITATIONS:

The student will draw plan views showing the location of all plumbing, heating and ventilation symbols to be used by the mechanical contractor. HUD specifications to be used.

1. Plumbing to include:
   a. waste lines
   b. vent lines
   c. water lines
   d. gas lines (if any)
   e. appliances, faucets, etc.

2. Heating and ventilation to include:
   a. registers/diffusers
   b. duct work
   c. furnace(s) and flue(s)
   d. compressor (air conditioning)
   e. thermostats, etc.

CRITERIA OF ACCEPTABLE PERFORMANCE:

1. All general criteria to be met.

2. PHV to be shown and in accordance with HUD Standards.

3. All water lines 90 degrees and parallel.

4. All PHV symbols according to Architectural Graphic Standards or Time Sheet Standards.

COMPETENCY NO. 24

TASK:

To prepare bid sheets.

GENERAL CONDITIONS AND LIMITATIONS:

Given the necessary catalogs and forms the student will prepare the following bid sheets (Figures 24-1 and 24-2). The bid sheets will be typed and a copy prepared.

GENERAL CRITERIA OF ACCEPTABLE PERFORMANCE:

1. Bid sheets according to Figures 24-1 and 24-2.
2. Bid sheets to be typed (error-free) and copied.
3. All items shown on the plan to be listed and priced.
4. Total price listed.
5. Method of payment listed.

A. Electrical

CONDITIONS AND LIMITATIONS:

The student will prepare an electrical bid according to electrical plan (Competency 23A).

CRITERIA OF ACCEPTABLE PERFORMANCE:

1. All general criteria to be met.

B. Plumbing, Heating and Ventilation

CONDITIONS AND LIMITATIONS:

The student will prepare a PHV Bid according to the PHV plan (Competency 23B)

CRITERIA OF ACCEPTABLE PERFORMANCE:

1. All general criteria to be met.

COMPETENCY NO. 24
FIGURE 24-1

Proposal _____

ANY SCHOOL ELECTRIC CO.

Electric Motor Sales Service

Commercial . Industrial . Residential

Anytown, Iowa ZIP

Proposal Submitted to | Phone | Date

Street | Job Name

City, State and Zip Code | Job Location

Architect | Date of Plans | Job Phone

We hereby submit specifications and estimates for:

We propose hereby to furnish material and labor - complete in accordance with above specifications, for the sum of:

_____ dollars ($_____)

Payment to be made as follows:

_____ Authorized Signature _____

Note: This proposal may be withdrawn by us if not accepted within _____ days.

Acceptance of proposal - the above prices, specifications and conditions are satisfactory and are hereby accepted. You are authorized to do the work as specified. Payment will be made as outlined above.

_____ Signature

Date of Acceptance _____

_____ Signature

Competency No. 24
Figure 24-2

Proposal _____

ANY SCHOOL
Plumbing, Heating & Air Conditioning
Any One, Owner
Any Address
Any Town, Iowa 52501

Proposal Submitted to _____ Phone _____ Date _____

Street _____ Job Name _____

City, State and Zip Code _____ Job Location _____

Architect _____ Date of Plans _____ Job Phone _____

We hereby submit specifications and estimates for:

We propose hereby to furnish material and labor - complete in accordance with above specifications, for the sum of:

_____ dollars ($_____)

Payment to be made as follows:

_____ Authorized Signature _____

Note: This proposal may be withdrawn by us if not accepted within _____ days.

Acceptance of proposal - the above prices, specifications and conditions are satisfactory and are hereby accepted. You are authorized to do the work as specified. Payment will be made as outlined above.

_____
Signature

Date of Acceptance _____

_____
Signature

ARCHITECTURAL DRAFTING

COMPETENCY NO. 25

TASK:

To draw sections and details.

GENERAL CONDITIONS AND LIMITATIONS:

Given the necessary tools and equipment, the student will lay out and draw the following sections and details. The drawings will be dimensioned, symboled, titled and noted with information needed by the builder for construction. Sections and details to be referenced to agree with all cutting plane lines and detail callouts. References may be used. No time limit. Design and drawing specifications to be used.

GENERAL CRITERIA OF ACCEPTABLE PERFORMANCE:

1. All design and drawing specifications to be met.

2. Sections and details to be drawn with all visible materials shown.

3. Background lines and hidden surfaces to be shown only for clarification.

4. Actual size of materials used (drawn to scale) and with the proper material symbols according to Architectural Graphic Standards or Time Saver Standards.

5. Notes with leaders, indicating all materials and parts, to be shown at locations where they occur.

6. Section number, title and scale to be shown and agree with cutting plane lines, and detail callouts.

A. Wall Section

CONDITIONS AND LIMITATIONS:

The student will draw, scale from ½" to 1" = 1'-0", a complete typical wall section showing elevations and different types of building materials used. The section to be outlined or profiled.

CRITERIA OF ACCEPTABLE PERFORMANCE:

1. All general criteria to be met.
2. Section to be complete height with no breaks.
3. Section to be profiled or outlined.
4. All measurements to be ± ¼" on the scale used.
5. Elevations to top of footing, floor and ceiling lines shown.

COMPETENCY NO. 25 (Cont'd)

B. Architectural Details

CONDITIONS AND LIMITATIONS:

The student will draw, scale 1½" or 3" = 1'0", architectural details. The details will illustrate problem areas of construction that are not shown by a typical wall section. A typical head, jamb and all of one door and one window must be included. The details are to be outlined or profiled, and show any elevations consistent with Competency 25 A.

CRITERIA OF ACCEPTABLE PERFORMANCE:

1. All general criteria to be met.
2. All bearing surfaces of different construction to be shown.
3. Head, jambs and sill details to be aligned according to standard drafting practices.
4. All measurements to be ± 1/16" for the scale used.
5. Details to be profiled or outlined.
6. Elevations to be consistent with wall sections.

C. Stair Sections(s)

CONDITIONS AND LIMITATIONS:

The student will draw, scale ½" = 1'-0", a complete section through each stairway to show the builder all design direction and safety features.

CRITERIA OF ACCEPTABLE PERFORMANCE:

1. All general criteria to be met.
2. A section of each stairway to be included.
3. All measurements to be ± ¼" on the scale ½= 1'-0".
4. Dimensions to include:
   a. number of risers
   b. riser heights
   c. total rise
   d. number of treads
   e. tread width
   f. total run
   g. headroom
   h. nosing length

COMPETENCY NO. 25 (CONT'D)

D. Fireplace Section(s)

CONDITIONS AND LIMITATIONS:

The student will draw, scale ½" = 1'-0", a complete section through each fireplace. The section(s) will include features from the bottom of footings to the top of the flue.

CRITERIA OF ACCEPTABLE PERFORMANCE:

1. All general criteria to be met.
2. All measurements to be ± ½" on the scale ½" = 1'-0".
3. Section of each fireplace to be included.
4. Section(s) to be complete height with no breaks.
5. All dimensions, elevations and notes necessary for construction must be shown.

ARCHITECTURAL DRAFTING

COMPETENCY NO. 26

TASK:

To draw framing plans

GENERAL CONDITIONS AND LIMITATIONS:

Given the necessary tools and equipment, the student will lay out and draw, scale ¼" = 1'0", the following framing plans. The student may use floor plan reproducible intermediate (sepias) or backgrounds. Drawing and design specifications to be used. Plans will conform to local building code or HUD minimum standards and show all framing and structural members with center lines, be dimensioned, noted and titled. References may be used. No time limit.

GENERAL CRITERIA OF ACCEPTABLE PERFORMANCE:

1. All design and drawing specifications to be met.

2. All measurements to be ± ½" on the scale ¼" = 1'-0".

3. Structural framing members to be sized and spaced in accordance with the local building code and HUD minimum standards.

4. All location and size dimensions and notes needed for framing the structure to be shown, using the aligned system of dimensioning.

5. General notes and specifications to be shown above the title block.

6. Specific notes and other information to be shown at the location it occurs.

7. Cutting plane lines and detail callouts to be shown and agree with sections and details (Competency No. 25).

8. Title and scale to be shown.

9. All structural and framing members to be shown with center lines.

COMPETENCY NO. 26 (Continued)

A. Floor Framing Plans

CONDITIONS AND LIMITATIONS:

The student will draw floor framing plans for all levels of the house.

CRITERIA OF ACCEPTABLE PERFORMANCE:

1. All general criteria to be met.

B. Roof Framing Plan

CONDITIONS AND LIMITATIONS:

The student will draw the roof framing plan for the house, including the layout for the roof style shown on the exterior elevations.

CRITERIA OF ACCEPTABLE PERFORMANCE:

1. All general criteria to be met.

2. Roof framing plan to include overhang projections.

ARCHITECTURAL DRAFTING

COMPETENCY NO. 27

TASK:

To complete presentations

GENERAL CONDITIONS AND LIMITATIONS:

Given the necessary tools and equipment, the student will lay out and complete the following presentations based on the design and drawing specifications and previous competencies 19-26. References may be used. No time limit.

GENERAL CRITERIA OF ACCEPTABLE PERFORMANCE:

1. Design and drawing specifications to be met.

2. Must conform to plans (Competencies 19-26).

A. Perspectives (Interior)

CONDITIONS AND LIMITATIONS:

The student will lay out and draw a one-point interior perspective of the kitchen. The station point, horizon line, vanishing point and picture plane to be positioned to give a realistic shape of depth projection. The drawing need not be centered on the sheet.

CRITERIA OF ACCEPTABLE PERFORMANCE:

1. All general criteria to be met.

2. Station point, horizon line, vanishing point and picture plane are to be located to give a realistic (nondistorted) shape of depth projection.

3. All receding lines, if extended, to meet at vanishing point.

4. All vertical lines to be drawn 90° with the horizontal.

5. Drawing to be consistent with floor plan (kitchen layout).

COMPETENCY NO. 27 (Cont'd)

B. Perspectives (Exterior)

CONDITIONS AND LIMITATIONS:

The student will use a floor plan and front elevation drawn to an appropriate scale to lay out and draw a two point perspective of the exterior of a home. The station point, horizon line, vanishing points and picture plane are to be positioned to give a realistic shape of depth projection. The drawing need not be centered on the sheet.

CRITERIA OF ACCEPTABLE PERFORMANCE:

1. All general criteria to be met.
2. Vanishing points to be on horizon line.
3. All receding lines, if extended, to meet at the vanishing points.
4. Station point, horizon line, vanishing points and picture plane are located to give a realistic (nondistorted) shape of depth projection.
5. Drawing to be consistent with elevations.

C. Presentation Drawings

CONDITIONS AND LIMITATIONS:

The student will lay out, color and ink, scale: 1/8" = 1'-0", plan view(s) and elevations of the home. The finished drawings are to be on illustration board. Walls of correct thickness, all interior and exteior details and landscaping to be inked. Rooms are to be labeled and approximate size given. total square footage should be given with all lettering done mechanically. Floor coverings in color, shading in closets, outside details such as walks, drives, patios or decks, pools and landscaping should be included. Furniture may be included. Finished board to have a mat frame.

CRITERIA OF ACCEPTABLE PERFORMANCE:

1. All general criteria to be met.
2. Coloring to be of light tints and uniformly applied within ink lines.
3. Drafting media to be illustration board.
4. Exterior and interior walls to be inked as solid lines.
5. All lettering to be completed mechanically and error free.
6. Drawing to be compatible with floor plan(s), elevations, site, and landscape plans.
7. Drawing is to be free of ink smears.
8. Mat frame to have straight, clean cuts and parallel to edges of illustration board.

COMPETENCY NO. 27 (CONT'D)

D. Models

CONDITIONS AND LIMITATIONS:

The student will construct, scale ¼" = 1'-0", a model of the home. The model is to be constructed on a base equal in size to the site plan. It may be built of any suitable model materials with a removable roof and floor(s). Interior room layout should be shown but the amount of detail included may be determined by the student. Exterior detail is to be complete including landscaping.

CRITERIA OF ACCEPTABLE PERFORMANCE:

1. All general criteria to be met.
2. Base size according to site plan ± 1'-0" on the scale ¼" = 1'-0".
3. Coloring to be of light tints and compatible with presentation drawing.
4. Details such as cabinets, fixtures, trim, siding, etc., neatly done and ± 2" on the scale ¼" = 1'-0".
5. Roof and floor(s) to be removable to show interior room layout.
6. Patios or decks, walks, drives and landscaping included, to be ± 2" on the scale ¼" = 1'-0", and according to site and landscaping plans.

ARCHITECTURAL DRAFTING

COMPETENCY NO. 28

TASK:

To complete design drawings and outline specifications for a commercial building.

GENERAL CONDITIONS AND LIMITATIONS:

Given the necessary tools and equipment, the student will make the following design drawings and outline specifications for a small commercial building. Basic dimensions, notes, title and scale will be shown. The drawings and outline specifications will show and describe the information needed by the client to understand the design. References may be used. No time limit. The design and drawing specifications are as follows:

1. The design is to be for a small suburban retail store located on a commercial lot 80' wide and 140' deep. The design is to provide for the following facilities:

   a. a one story structure with a basement in the rear half of the building.

   b. the main floor to have 5000 sq. ft. with a basement of 2500 sq. ft.

   c. both levels to have storage space in the rear of the building with unloading dock and doors on the main level.

   d. employee parking behind the building.

   e. display window across the entire front of building.

   f. private office with 150 sq. ft. on the main floor.

   g. two rest rooms on the main floor.

   h. two stairways, one for public use and the other for service and emergency exit.

   i. check out counter, merchandise and aisle space in retail areas.

   j. the foundation to be reinforced, cast-in-place concrete.

   k. above grade, exterior walls to be load bearing concrete block and brick veneer construction.

   l interior partitions to be frame construction.

   m. floors to be concrete slab on grade with main floor over basement area to be steel joist and concrete.

   n. roof construction to be steel joist and built-up roofing.

COMPETENCY NO. 28 (CONT'D)

2. The design to comply with the local building code.

3. All drawing sheets within the set of design drawings must be on film, mylar or tracing paper of the same size. Sheet layout to be an original design by the student.

4. Construction lines to be laid out with lead and instruments and be non-producible (a grid sheet under layment may be used. All final lines in the set of design drawings will be sketched free hand with a Flair, or equivalent, felt tip pen over the construction lines and be nonreproducible.

5. All lettering to be free hand with a Flair or equivalent felt tip pen. Guidelines to be used. Lettering height to be 1/8" for notes and dimensions and 3/16"or ¼" for room names and titles.

6. The set of design drawings to include:

page 1	Exterior elevations	page 4	Cross section
page 2	Lower level floor plan	page 5	Site plan
page 3	Upper level floor plan		

GENERAL CRITERIA OF ACCEPTABLE PERFORMANCE:

1. All design and drawing specifications to be met.

2. Overall dimensions to be shown on plans.

3. Room names with basic size in note form to be shown in each area.

4. Drawings to be free of ink smears.

5. Material symbols according to the Architectural Graphic Standards or Time Saver Standards.

6. Title and scale to be shown.

COMPETENCY NO. 28 (CONT'D)

A. Floor Plans

CONDITIONS AND LIMITATIONS:

The student will lay out and draw, scale ¼" = 1'-0", design floor plans for the different levels. The plan views will include basic merchandise and aisle layout according to Time Saver Standards. North point to be shown.

CRITERIA OF ACCEPTABLE PERFORMANCE:

1. All general criteria to be met.
2. All measurements to be ± 1" on the scale ¼" - 1' -0".
3. All walls, finished openenings, windows and doors to be shown.
4. Stairways, plumbing fixtures and all permanent features to be shown.
5. Store fixtures to be outlined showing aisle, and basic counter layout.
6. North point to be shown.

B. Exterior Elevations

CONDITIONS AND LIMITATIONS:

The student will lay out and draw, scale ¼" =1'-0", at least two exterior elevations, including the front. Below grade construction is not to be shown. The front elevation to be shaded using line shading.

CRITERIA OF ACCEPTABLE PERFORMANCE:

1. All general criteria to be met.
2. All measurements to be ± 1" on the scale ¼" = 1'-0".
3. No below grade construction to be shown.
4. Front elevation to be line shaded for sun shadow.
5. All doors, windows, steps, materials, etc., to be shown.

COMPETENCY NO. 28 (CONT'D)

C. Cross Section

CONDITIONS AND LIMITATIONS:

The student will lay out and draw, sclae ¼" = 1'-0", a full cross section through the long axis of the structure showing the major structural features such as footing and foundation walls, floor systems, roof systems etc.. Floor and ceiling elevations and room names in sectioned areas will be shown. Store fixtures need not be shown.

CRITERIA OF ACCEPTABLE PERFORMANCE:

1. All general criteria to be met.

2. All measurements to be ±1" on the scale ¼" = 1'-0".

3. Floor and ceiling elevations will be shown.

4. Room names in sectioned areas to be shown.

5. Major structural features to be shown.

D. Site Plan

CONDITIONS AND LIMITATIONS:

The student will lay out and draw, scale 1/8" = 1'-0", a site plan including property lines, outline of structure, exterior features, and building set backs. North point to be shown.

CRITERIA OF ACCEPTABLE PERFORMANCE:

1. All general criteria to be met.

2. All measurements to be ± 2" on the scale 1/8" = 1'-0".

3. Property lines, outline of structure, exterior features, setbacks, and docking and parking to be shown.

4. North point to be shown.

COMPETENCY NO. 28 (CONT'D)

E. Outline Specifications

CONDITIONS AND LIMITATIONS:

The student will freehand letter or type a set of outline specifications (Figure 28-1) to accompany the design drawing. Brief descriptions under each heading will describe the type of construction and materials to be used.

CRITERIA OF ACCEPTABLE PERFORMANCE:

1. All general criteria to be met.

2. All divisions of outline specifications (Figure 28-1) to be included.

3. Outline specifications to agree with design drawings and contain all types of construction and materials used.

4. No misspelled words.

CIVIL DRAFTING

COMPETENCY NO. 29

TASK:

To measure with a chain.

CONDITIONS AND LIMITATIONS:

Given the necessary tools and equipment including a transit, the student will measure the distance between two predetermined points laid out on sloped terrain approximately 500 feet apart. The measurements will be horizontal distances in a straight line. The distance between the predetermined points will be measured twice with the student acting as the head chainperson the first measurement and the rear chainperson on the second. All entries to be recorded in a field book. All work to be completed without references. Task to be completed within one hour.

CRITERIA OF ACCEPTABLE PERFORMANCE:

1. Each 100' measurement within the 500' distance to be in a straight line (± .02').

2. Chain distances to be ± .01'.

3. Each chained distance to be level (± 5').

4. All chained measurements entered in a field book.

5. Student will act as head chainperson on first measurement and rear chainperson on second.

6. Task to be completed within the time limit.

COMPETENCY NO. 30

TASK:

To draw a profile.

CONDITIONS AND LIMITATIONS: (Note: Equivalent criteria may be used)

Given the necessary tools and equipment including cross section paper and a contour map (Figure 30-1), the student will draw a profile on the cross section paper along a line drawn from Point X to Point Y on the map. Lay out and identify stations on the profile in 100 feet intervals with Point X being station 0+00. All lines inked according to the alphabet of lines and reproducible. Construction lines to be non-reproducible. Title, vertical and horizontal scales to be shown. All lettering to be freehand, 1/8" high and in ink. All work to be completed without references. Task to be completed within 3 hours.

CRITERIA OF ACCEPTABLE PERFORMANCE:

1. All ink lines according to ANSI Y14.2M and reproducible. Construction lines non-reproducible.

2. Drawing to be free of ink smears.

3. Letters and numbers to be in ink and according to ANSI Y14.2M .

4. Station lines are shown every 100 feet and identified beginning with Station 0+00 at Point X.

5. The vertical scale to be either 1" = 5' or 1" = 10'. Scales and title to be shown.

6. Elevation points on the profile to agree with the intersection of contours and the line drawn from Point X to Point Y on the given map.

7. A line to connect the elevation points.

8. Task to be completed within time limit.

COMPETENCY NO. 30
Figure 30-1

BEST COPY AVAILABLE

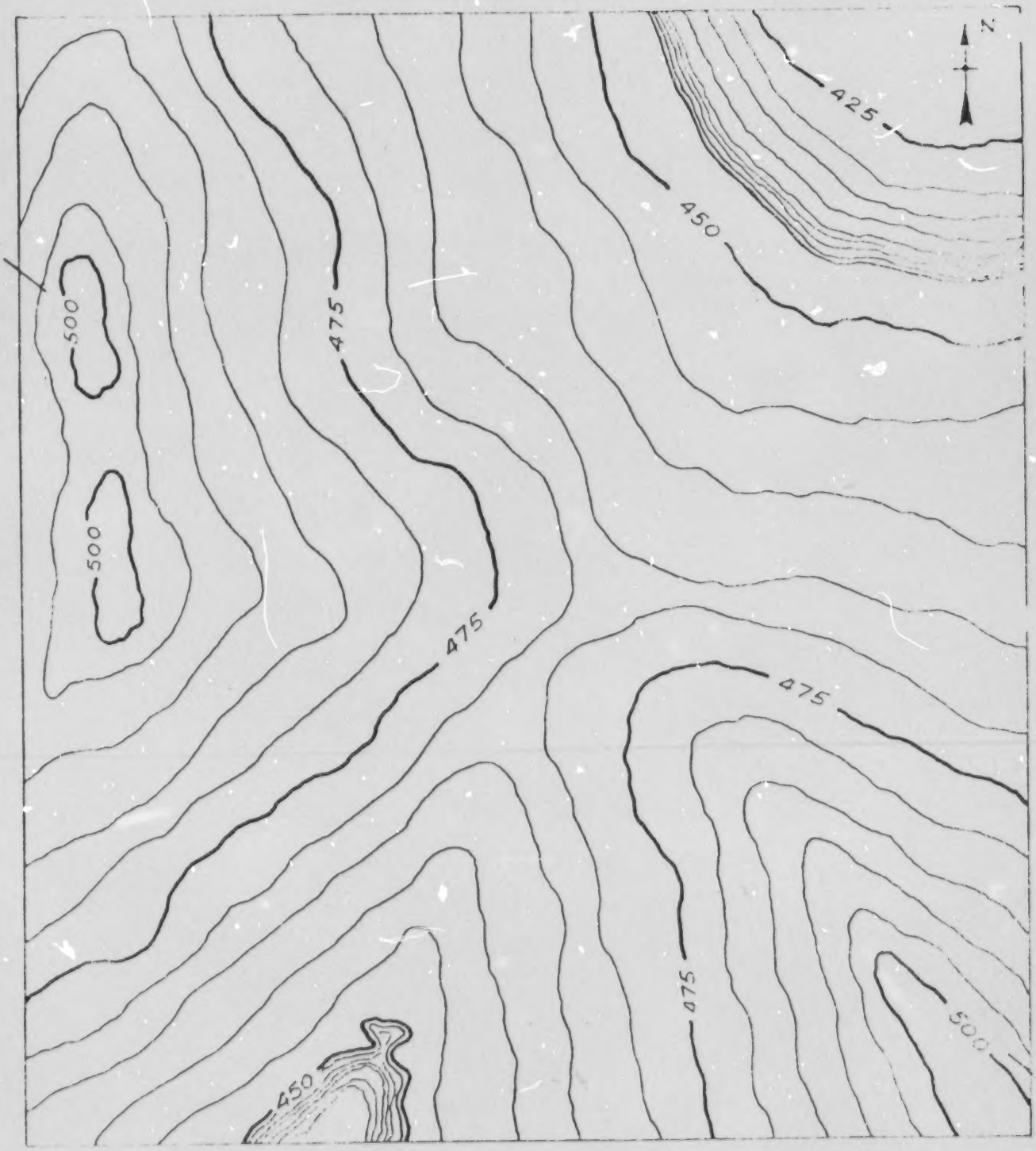

MAP
HARRIS WATER DISTRICT
SCALE : 1" - 100'

CIVIL DRAFTING

COMPETENCY NO. 31

TASK:

To draw a map of a subdivision plat.

CONDITIONS AND LIMITATIONS: (Note: Equivalent criteria may be used)

Given the necessary tools and equipment (including drafting machine), 11 x 17 polyester film or drafting paper, sheet layout (Figure 1-1), and a reduced scale copy of a subdivision map (Figure 31.1) or a similar map, the student will layout and draw, scale 1" = 100', a map of the subdivision plat. The closed traverse or control line is laid out first and starts at point "A", continuing through point "F" and closing at point "A". "A" is located 1.8" from the lower border line and 3/8 from the right hand border line. Construction lines to be non-reproducible (blue non-print lead may be used). Finish the plat as follows:

1. Street lines - No. 1 K&E reservoir pen or equivalent.
2. Lot lines - No. 00 K&E reservoir pen or equivalent.
3. Circles around control points - No. .00 K & E reservoir pen or equivalent with circle template.

Lettering as follows:

1. Street names - #140 LeRoy template or equivalent.
2. Lot numbers - #140 LeRoy template or equivalent.
3. Lot dimensions and notes to be freehand 3/32" letters, with No. 0 K&E reservoir pen or equivalent.

All work to be done without references. Task to be completed within 8 hours.

CRITERIA OF ACCEPTABLE PERFORMANCE:

1. Starting point located according to Conditions and Limitations.
2. All lines and lettering according to Conditions and Limitations.
3. Street and lot layout dimensions according to the given figure ± 1.00' on the scale 1" = 100'.
4. Closing of traverse to be ± 5.00' on the scale 1" = 100'
5. Drawing to be free of ink smears.
6. Arcs and straight lines to be tangent.
7. Sheet layout according to Figure 1.1.
8. Task to be completed within the time limit.

COMPETENCY NO. 31

Figure 31-1

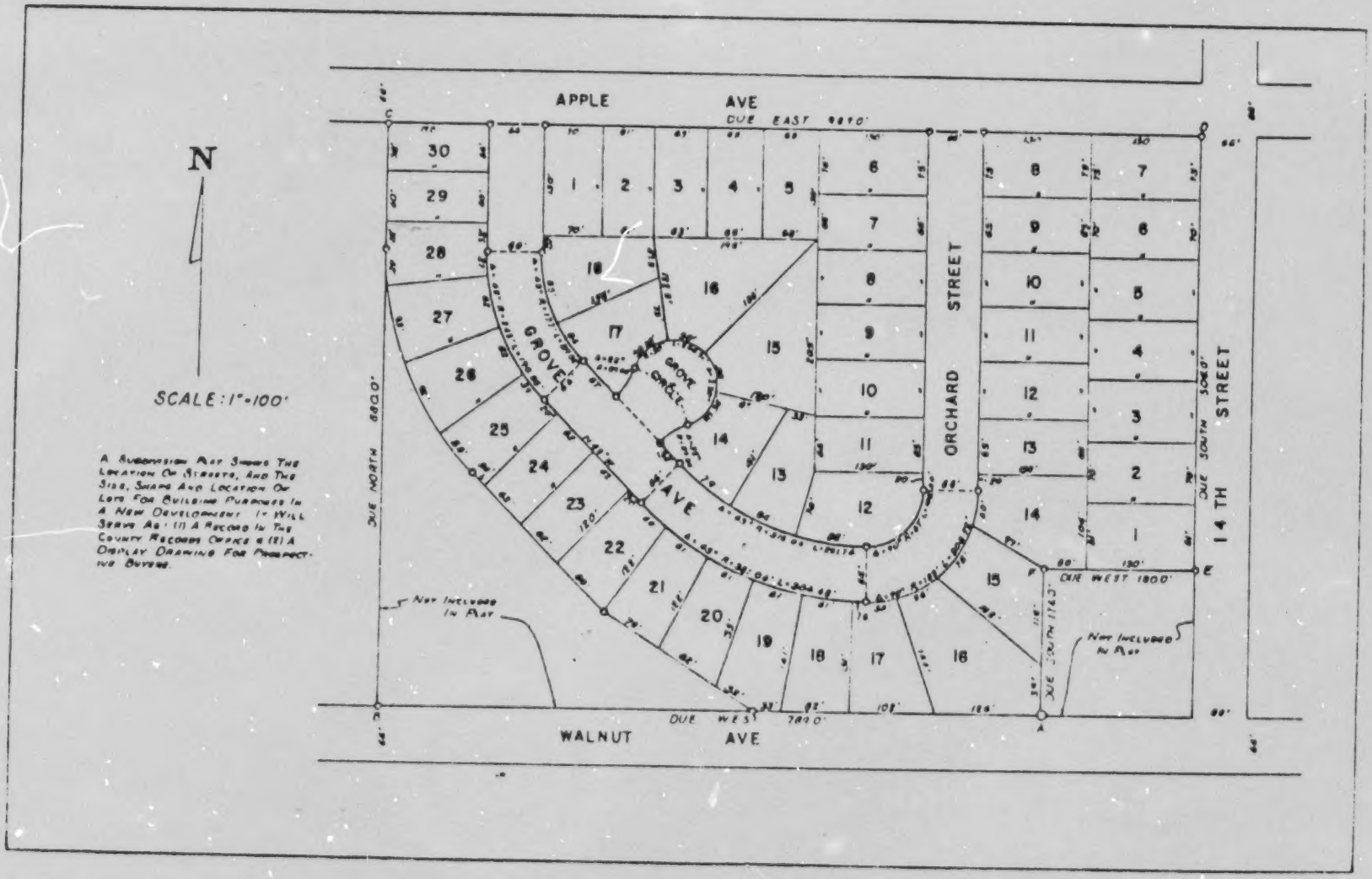

BEST COPY AVAILABLE

CIVIL DRAFTING

COMPETENCY NO. 32

TASK:

To draw contour lines.

CONDITIONS AND LIMITATIONS: (Note: Equivalent criteria may be used)

Given the necessary tools and equipment (including a calculator and engineer's scale), 8½ x 11 drafting paper, sheet layout (Figure 1-1), and gridded lot layout with rod shots (Figure 32-1), the student will layout and draw scale lines at 1" = 50', the lot with grid lines. Using given rod shots, the student will interpolate elevations and will draw contour lines at 1' elevation intervals. Elevations to be indicated at each contour line. All lines reproducible with grid lines thin. Index lines are to be shown. All work to be completed without references. Task to be completed within two hours.

CRITERIA OF ACCEPTABLE PERFORMANCE:

1. Grid layout to be ± 1.00' on the scale 1" = 50'.

2. Location of contour line of grid line to be ± 1.00' on the scale 1" = 50'.

3. Every fifth contour line to be index line.

4. Index line to be twice as thick as other contour lines.

5. Interpolated elevations to be indicated in contour line break and agree with given rod shots.

6. Sheet layout according to Figure 1-1.

7. All lines printable with grid lines thin.

8. Task to be completed within the time limit.

Figure 32-1

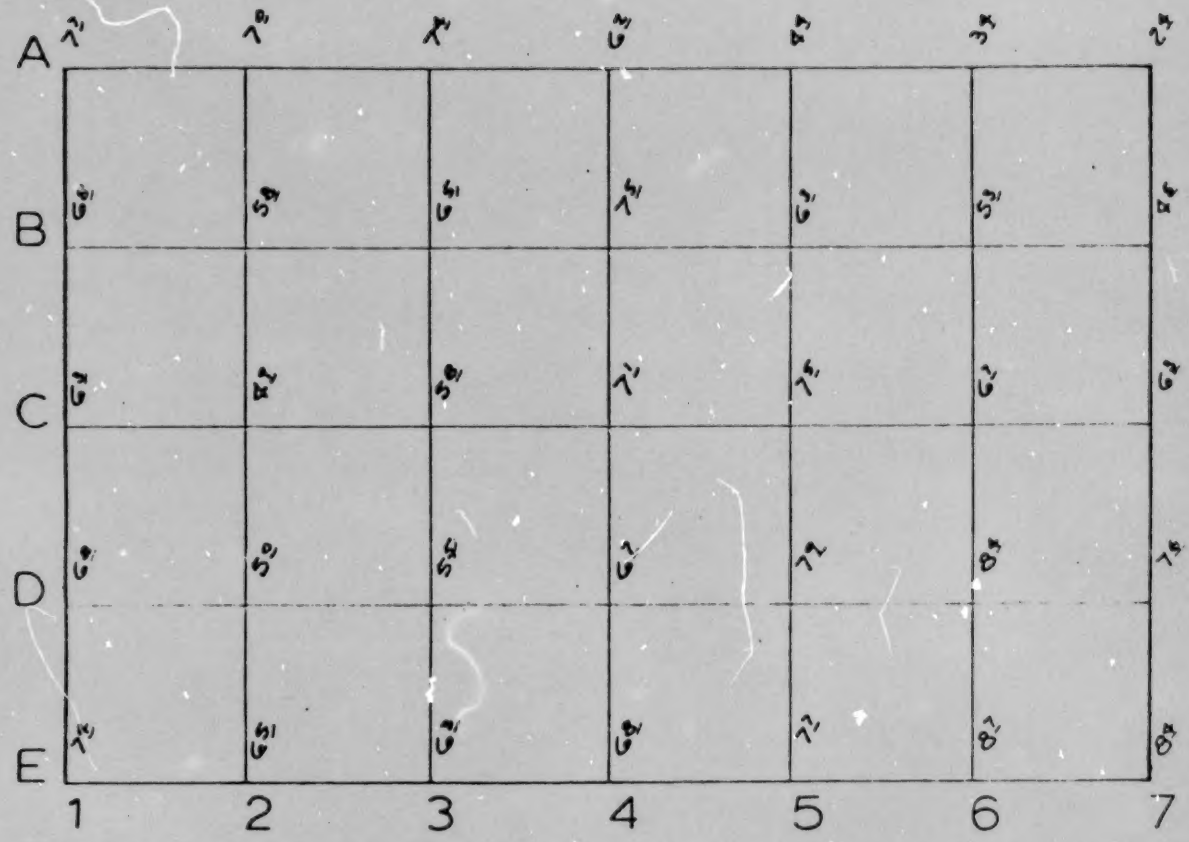

GRIDDED LOT PLAN

SCALE: 1" = 50'

NOTE:
B.M. 1471.36'
BACKSITE 11.86'

CIVIL DRAFTING

COMPETENCY NO. 33

TASK:

To determine elevations by leveling.

CONDITIONS AND LIMITATIONS:

Given the necessary tools and equipment, including transit or level, the student will run a set of differential or bench levels. Starting at point "X" (a known elevation at point "X", with four turn points, the student will deterime the elevation at all points. All entries will be recorded in a field book. All work to be completed without references. Task to be completed within 2 hours.

CRITERIA OF ACCEPTABLE PERFORMANCE:

1. Elevation at closing point to be the same as elevation at starting point (±.03')

2. Elevation readings at turning points to be ±.005'.

3. All elevation readings recorded in the field book.

4. Procedures related to the care and handling of equipment, setup and leveling of transit, etc. to be in accordance with the manufacturer's manual.

5. Task to be completed within the time limit.

CIVIL DRAFTING

COMPETENCY NO. 34

TASK:

To measure angles.

CONDITIONS AND LIMITATIONS:

Given the necessary tools and equipment, the student will set stakes in three directions approximately 100' from the transit setup. The student will measure each of the three angles by triple repetition. All work to be completed without reference. All entries to be recorded in a field book. Task to be completed within 2 hours.

CRITERIA OF ACCEPTABLE PERFORMANCE:

1. The total of all angles must add up to 360 degrees $\pm$ 1 minute.

2. All angles recorded in a field book.

3. Procedures related to the care and handling of equipment, setup and leveling of transit, etc., to be in accordance with the manufacturers manual.

4. Task to be completed within the time limit.

VIII. ENABLING TASKS

ENABLING TASKS

Enabling tasks are those activities necessary for developing job skills. Completion of all enabling tasks for a competency leads to achievement of that competency. They may become daily or weekly lesson plans if teachers develop criteria similar to those developed for the competencies. Each of these enabling tasks have been suggested by the participating task force members and reviewed by appropriate private sector representatives.

ENABLING TASKS

COMPETENCY NO. 1 TO LAY OUT A SHEET FOR A DRAWING

select, use and maintain pencils
select, use and maintain triangles
use and maintain T squares, parallel bar, and drafting machine
use and maintain lettering guide
use and maintain electric eraser
select, use and maintain erasers and shield
select, use and maintain dry cleaning materials
use and maintain drafting boards and tables
select, use and maintain lead pointers
select, use and care for drawing media
select and use fastening materials
use and maintain dusting brush
select, use and maintain paper cutters
draw parallel and perpendicular lines
follow the alphabet of lines
draw corners that connect but do not overlap
use proper sheet layout and title block
select, use, and maintain reservoir pens
select and use architect's scale
check for corrections
select and use title block

COMPETENCY NO. 2 TO DO FREEHAND LETTERING

select, use and maintain pencils
use and maintain T squares, parallel bar, and drafting machine
use and maintain lettering guide
use and maintain electric eraser
select, use and maintain erasers and shield
select, use and maintain dry cleaning materials
use and maintain drafting boards and tables
select, use and maintain lead pointers
use and maintain white printer
select, use and care for drawing media
select, use and care for reproduction media
select and use fastening materials
use and maintain dusting brush
select, use and maintain paper cutters
letter freehand, vertical Gothic (upper case letters, numbers, and fractions)
letter freehand, inclined Gothic (upper case letters, numbers and fractions)
follows the alphabet of lines
select, use and maintain reservoir pens
check for corrections

ENABLING TASKS

COMPETENCY NO. 3 TO COMPLETE FREEHAND SKETCHES

select, use and maintain pencils
use and maintain electric eraser
select, use and maintain erasers and shield
use and maintain drafting boards and tables
select, use and maintain lead pointers
select, use and care for drawing media
select and use fastening materials
select, use and maintain paper cutters
draw arcs and circles
follow the alphabet of lines
determine sequence of drawing
sketch vertical, horizontal and inclined lines
sketch in proportion
select and sketch front, top, and right side views of an object
sketch an isometric view of an object
analyze problem for drawing solution
check for corrections

COMPETENCY NO. 4 TO COMPLETE GEOMETRIC CONSTRUCTION

select, use and maintain pencils
select, use and maintain triangles
use and maintain T squares, parallel bar, and drafting machine
use and maintain electric eraser
select, use and maintain erasers and shield
select, use and maintain dry cleaning materials
select, use and maintain compass
use and maintain drafting boards and tables
select, use and maintain lead pointers
use and maintain white printer
select, use and care for drawing media
select, use and care for reproduction media
select and use fastening materials
use and maintain dusting brush
select, use and maintain paper cutters
draw arcs and circles
draw tangent lines, arcs and circles
draw parallel and perpendicular lines
follow the alphabet of lines
draw corners that connect but do not overlap
select, use and maintain reservoir pens
select and use architect's scale
use and maintain protractor
select, use and maintain irregular (French) and adjustable curves
bisect lines and angles
divide lines into equal parts
construct quadrilaterials (square, rectangle, etc.)
construct triangles
construct hexagons
construct octagons
use and maintain adjustable triangle
check for corrections.

ENABLING TASKS

COMPETENCY NO. 5 TO MEASURE TO SCALE

select, use and maintain pencils
select, use and maintain triangles
use and maintain T squares, parallel bar, and drafting machine
use and maintain electric eraser
select, use and maintain erasers and shield
use and maintain drafting boards and tables
select, use and maintain lead pointers
select, use and care for drawing media
select and use fastening materials
use and maintain dusting brush
select and use architect's scale
select and use metric scales
select and use engineer's scale
select and use mechanical scale
check for corrections

COMPETENCY NO. 6. to COMPLETE MULTIVIEW DRAWINGS USING ORTHOGRAPHIC PROJECTION

select, use and maintain pencils
select, use and maintain triangles
use and maintain T squares, parallel bar, and drafting machine
use and maintain lettering guide
use and maintain electric eraser
select, use and maintain erasers and shield
select, use and maintain dry cleaning materials
select, use and maintain compass
select, use and maintain dividers
use and maintain drafting boards and tables
select, use and maintain lead pointers
use and maintain white printer
select, use and care for drawing media
select, use and care for reproduction media
select and use fastening materials
use and maintain dusting brush
select, use and maintain paper cutters

letter freehand, vertical Gothic (upper case letters, numbers, and fractions)
letter freehand, inclined Gothic (upper case letters, numbers, and fractions)
draw arcs and circles
draw tangent lines, arc and circles
select, use and maintain templates
draw parallel and perpendicular lines
use mathematical computations
follow the alphabet of lines
draw corners that connect but do not overlap
follow proper computation, selection, and placement of dimensions
terminate dimension lines with arrowheads
apply notes and leaders
determine sequence of drawing
use proper sheet layout and title block
determine and draw necessary views of an object
lay out and center views using orthographic projection
use unidirectional and/or aligned system of dimensioning
draw detail drawings
select, use and maintain reservoir pens
select and use architect's scale
analyze problem for drawing solution
check for corrections
select and use title block

ENABLING TASKS

COMPETENCY NO. 7 TO DRAW SECTIONAL VIEWS

select, use and maintain pencils
select, use and maintain triangles
use and maintain T squares, parallel bar, and drafting machine
use and maintain lettering guide
use and maintain electric eraser
select, use and maintain erasers and shield
select, use and maintain dry cleaning materials
select, use and maintain compass
select, use and maintain dividers
use and maintain drafting boards and tables
select, use and maintain lead pointers
use and maintain white printer
select, use and care for drawing media
select, use and care for reproduction media
select and use fastening materials
use and maintain dusting brush
select, use and maintain paper cutters
letter freehand, vertical Gothic (upper case letters, numbers, and fractions)
letter freehand. inclined Gothic (upper case letters, numbers, and fractions)
draw arcs and circles
draw tangent lines, arcs and circles
draw parallel and perpendicular lines
use mathematical computations
follow the alphabet of lines
draw corners that connect but do not overlap
follow proper computation, selection and placement of dimension
terminate dimension lines with arrowheads
apply notes and leaders
determine sequence of drawing
use proper sheet layout and title block
determine and draw necessary views of an object
lay out and center views using orthographic projection
use unidirectional and/or aligned system of dimensioning
draw rounds and fillets
draw detail drawings
draw section lining
draw break lines
select, use and maintain reservoir pens
draw sectional views (half, revolved, etc.)
locate and draw cutting plane lines
select and use architect's scale
select and use metric scales
select and use mechanical scale
construct quadrilaterals (square, rectangle, etc.)
analyze problem for drawing solution
construct hexagon
check for corrections
select and use title blocks

COMPETENCY NO. 8 TO COMPLETE AUXILIARY VIEWS

select, use and maintain pencils
select, use and maintain triangles
use and maintain T squares, parallel bar, and drafting machine
use and maintain lettering guide
use and maintain electric eraser
select, use and maintain erasers and shield
select, use and maintain dry cleaning materials
select, use and maintain compass
select, use and maintain dividers
use and maintain drafting boards and tables
select, use and maintain lead pointers
use and maintain white printer
select, use and care for drawing media
select, use and care for reproduction media
select and use fastening materials
use and maintain dusting brush
select, use and maintain paper cutters
letter freehand, vertical Gothic (upper case letters, numbers, and fractions)
letter freehand, inclined Gothic (upper case letters, numbers, and fractions)
draw arcs and circles
draw tangent lines, arcs and circles
select, use and maintain templates
draw parallel and perpendicular lines
use mathematical computations
follow the alphabet of lines
draw corners that connect but do not overlap
follow proper computation, selection and placement of dimensions
terminate dimension lines with arrowheads
apply notes and leaders
determine sequence of drawing
use proper sheet layout and title block
determine and draw necessary views of an object
lay out and center views using orthographic projection
use unidirectional and/or aligned system of dimensioning
draw primary auxiliary views
draw secondary auxiliary views
draw rounds and fillets
draw detail drawings
select, use and maintain reservoir pens
select and use architect's scale
select and use mechanical scale
use and maintain protractor
select, use and maintain irregular (French) and adjustable curves
construct quadrilaterials (square, rectangle, etc.)
analyze problem for drawing solution
construct hexagon
specify and use symbols
use and maintain adjustable triangle
check for corrections
select and use title block

ENABLING TASKS

COMPETENCY NO. 9 TO COMPLETE PICTORIAL DRAWINGS

select, use and maintain pencils
select, use and maintain triangles
use and maintain T squares, parallel bar, and drafting machine
use and maintain lettering guide
use and maintain electric eraser
select, use and maintain erasers and shield
select, use and maintain dry cleaning materials
select, use and maintain compass
select, use and maintain dividers
use and maintain drafting boards and tables
select, use and maintain lead pointers
use and maintain white printer
select, use and care for drawing media
select, use and care for reproduction media
select and use fastening materials
use and maintain dusting brush
select, use and maintain paper cutters
letter freehand, vertical Gothic (upper case letters, numbers and fractions)
letter freehand, inclined Gothic (upper case letters, numbers and fractions)
draw arcs and circles
draw tangent lines, arcs and circles
select, use and maintain templates
draw parallel and perpendicular lines
use mathematical computations
follow the alphabet of lines
draw corners that connect but do not overlap
follow proper computation, selection and placement of dimensions
terminate dimension lines with arrowheads
apply notes and leaders
determine sequence of drawing
use proper sheet layout and title block
use unidirectional and/or aligned system of dimensioning
select, use and maintain reservoir pens
draw isometric arcs and circles
select, use architect's scale
center isometric drawings
draw isometric views
draw oblique (cavalier) views
draw perspective views
analyze problem for drawing solution
check for corrections
select and use title block

ENABLING TASKS

COMPETENCY NO. 10 TO TRACE IN INK A DETAIL DRAWING

select, use and maintain triangles
use and maintain T square, parallel bar, and drafting machine
use and maintain letter guide
use and maintain electric eraser
select, use and maintain erasers and shield
select, use and maintain compass
use and maintain drafting boards and tables
use and maintain white printer
select, use and care for drawing media
select, use and care for reproduction media
select and maintain dusting brush
select, use and maintain paper cutters
letter freehand, vertical Gothic (upper case letters, numbers, and fractions)
letter freehand, inclined Gothic (upper case letters, numbers, and fractions)
draw tangent lines, arcs and circles
select, use and maintain templates
follow the alphabet of lines
draw corners that connect but do not overlap
terminate dimension lines with arrowheads
select, use and maintain reservoir pens
determine sequence of inking
check for corrections

COMPETENCY NO. 11 TO DRAW THREADS, FASTENERS

select, use and maintain pencils
select, use and maintain triangles
use and maintain T squares, parallel bar, and drafting machine
use and maintain lettering guide
use and maintain electric eraser
select, use and maintain erasers and shield
select, use and maintain dry cleaning materials
select, use and maintain compass
select, use and maintain dividers
use and maintain drafting boards and tables
select, use and maintain lead pointers
use and maintain white printer
select, use and care for drawing media
select, use and care for reproduction media
select and use fastening materials
use and maintain dusting brush
select, use and maintain paper cutters
letter freehand, vertical Gothic (upper case letters, numbers, and fractions)
letter freehand, inclined Gothic (upper case letters, numbers and fractions)
craw arcs and circles
draw tangent lines, arcs and circles
select, use and maintain templates
draw parallel and perpendicular lines
use mathematical computations
follow the alphabet of lines
draw corners that connect but do not overlap
follow proper computations, selection and placement of dimensions
terminate dimension lines with arrowheads
apply notes and leaders
determine sequence of drawings
use proper sheet layout and title block
determine and draw necessary views of an object
lay out and center views using orthographic projection
use unidirectional and/or aligned system of dimensioning
select, use and maintain reservoir pens
use reference books
draw bolts and screws
draw springs
draw external and internal thread using the detail and schematic methods
select and use architect's scale
select and use mechanical scale
dividing lines into equal parts
construct hexagon
check for corrections
select and use title block

ENABLING TASKS

COMPETENCY NO. 12 TO DRAW GRAPHIC CHARTS

select, use and maintain pencils
select, use and maintain triangles
use and maintain T squares, parallel bar, and drafting machine
use and maintain lettering guide
use and maintain electric eraser
select, use and maintain erasers and shield
select, use and maintain dry cleaning materials
select, use and maintain compass
select, use and maintain dividers
use and maintain drafting boards and tables
select, use and maintain lead pointers
use and maintain white printer
select, use and care for drawing media
select, use and care for reproduction media
select and use fastening materials
use and maintain dusting brush
select, use and maintain paper cutters
draw arcs and circles
draw parallel and perpendicular lines
use mathematical computations
follow the alphabet of lines
draw corners that connect but do not overlap
determine sequence of drawing
use proper sheet layout and title block
select, use and maintain reservoir pens
draw charts
determine sequence of inking
select and use architect's scale
select and use mechanical scale
use and maintain protractor
analyze problem for drawing solution
use and maintain mechanical lettering set
use and maintain adjustable triangle
check for corrections
select and use title block

ENABLING TASKS

COMPETENCY NO. 12 TO DRAW GRAPHIC CHARTS

select, use and maintain pencils
select, use and maintain triangles
use and maintain T squares, parallel bar, and drafting machine
use and maintain lettering guide
use and maintain electric eraser
select, use and maintain erasers and shield
select, use and maintain dry cleaning materials
select, use and maintain compass
select, use and maintain dividers
use and maintain drafting boards and tables
select, use and maintain lead pointers
use and maintain white printer
select, use and care for drawing media
select, use and care for reproduction media
select and use fastening materials
use and maintain dusting brush
select, use and maintain paper cutters
draw arcs and circles
draw parallel and perpendicular lines
use mathematical computations
follow the alphabet of lines
draw corners that connect but do not overlap
determine sequence of drawing
use proper sheet layout and title block
select, use and maintain reservoir pens
draw charts
determine sequence of inking
select and use architect's scale
select and use mechanical scale
use and maintain protractor
analyze problem for drawing solution
use and maintain mechanical lettering set
use and maintain adjustable triangle
check for corrections
select and use title block

ENABLING TASKS

COMPETENCY NO. 13 TO CALCULATE TOLERANCES AND FITS

use mathematical computations
use reference books
use calculator
calculate tolerances
calculate fits
check for corrections

COMPETENCY NO. 14 TO DRAW AND CONSTRUCT MODELS OF DEVELOPMENTS AND INTERSECTIONS

select, use and maintain pencils
select, use and maintain triangles
use and maintain T squares, parallel bar, and drafting machine
use and maintain electric eraser
select, use and maintain erasers and shield
select, use and maintain dry cleaning materials
select, use and maintain compass
select, use and maintain dividers
use and maintain drafting boards and tables
select, use and maintain lead pointers
select, use and care for drawing media
select and use fastening materials
use and maintain dusting brush
select, use and maintain paper cutters
draw arcs and circles
draw tangent lines, arcs and circles
draw parallel and perpendicular lines
use mathematical computations
draw corners that connect but do not overlap
determine sequence of drawing
select, use and maintain reservoir pens
develop and construct model of truncated prism
develop and construct model of intersected cylinders
develop and construct model of transition piece
select and use architect's scale
select and use mechanical scale
select, use and maintain irregular (French) and adjustable curves
construct quadrilaterials (square, rectangle, etc.)
analyze problem for drawing solution
construct triangles
develop and construct models
check for corrections

COMPETENCY NO. 15 TO COMPLETE A PLATE CAM PROFILE DRAWING

select, use and maintain pencils
select, use and maintain triangles
use and maintain T squares, parallel bar, and drafting machine
use and maintain lettering guide
use and maintain electric eraser
select, use and maintain erasers and shield
select, use and maintain dry cleaning materials
select, use and maintain compass
select, use and maintain dividers
use and maintain drafting boards and tables
select, use and maintain lead pointers
use and maintain white printer
select, use and care for drawing media
select, use and care for reproduction media
select and use fastening materials
use and maintain dusting brush
select, use and maintain paper cutters
letter freehand, vertical Gothic (upper case letters, numbers and fractions)
letter freehand, inclined Gothic (upper case letters, numbers and fractions)
draw arcs and circles
draw tangent lines, arcs and circles
select, use and maintain templates
draw parallel and perpendicular lines
use mathematical computations
follow the alphabet of lines
draw corners that connect but do not overlap
follow proper computations, selection and placement of dimensions
terminate dimension lines with arrowheads
apply notes and leaders
determine sequence of drawing
use proper sheet layout and title block
determine and draw necessary views of an object
layout and center views using orthographic projection
use unidirectional and/or aligned system of dimensioning
draw detail drawings
select, use and maintain reservoir pens
draw displacement diagrams
draw plate cam profile
select and use architect's scale
select and use mechanical scale
select, use and maintain irregular (French) and adjustable curves
analyze problem for drawing solution
check for corrections
select and use title block

ENABLING TASKS

COMPETENCY NO. 16 TO COMPLETE GEAR DRAWINGS

select, use and maintain pencils
select, use and maintain triangles
use and maintain T squares, parallel bar, and drafting machine
use and maintain lettering guide
use and maintain electric eraser
select, use and maintain erasers and shield
select, use and maintain dry cleaning materials
select, use and maintain compass
select, use and maintain dividers
use and maintain drafting boards and tables
select, use and maintain lead pointers
use and maintain white printer
select, use and care for drawing media
select, use and care for reproduction media
select and use fastening materials
use and maintain dusting brush
select, use and maintain paper cutters
letter freehand, vertical Gothic (upper case letters, numbers, and fractions)
letter freehand, inclined Gothic (upper case letters, numbers, and fractions)
draw arcs and circles
draw tangent lines, arcs and circles
select, use and maintain templates
draw parallel and perpendicular lines
use mathematical computations
follow the alphabet of lines
draw corners that connect but do not overlap
follow proper computation, selection, and placement of dimensions
terminate dimension lines with arrowheads
apply notes and leaders
determine sequence of drawing
use proper sheet layout and title block
lay out and center views using orthographic projection
use unidirectional and/or aligned system of dimensioning
draw rounds and fillets
draw detail drawings
draw section lining
select, use and maintain reservoir pens
use calculator
use reference books
draw gears and pinions
select and use architect's scale
select and use mechanical scale
analyze problem for drawing solution
check for corrections
select and use title block

ENABLING TASKS

COMPETENCY NO. 17 TO COMPLETE PRODUCTION DRAWINGS

select, use and maintain pencils
select, use and maintain triangles
use and maintain T square, parallel bar, and drafting machine
use and maintain lettering guide
use and maintain electric eraser
select, use and maintain erasers and shield
select, use and maintain dry cleaning materials
select, use and maintain compass
select, use and maintain dividers
use and maintain drafting boards and tables
select, use and maintain lead pointers
use and maintain white printer
select, use and care for drawing media
select, use and care for reproduction media
select and use fastening materials
use and maintain dusting brush
select, use and maintain paper cutters
letter freehand, vertical Gothic (upper case letters, numbers, and fractions
letter freehand, inclined Gothic (upper case letters, numbers, and fractions
draw arcs and circles
draw tangent lines, arcs and circles
select, use and maintain templates
draw parallel and perpendicular lines
use mathematical computations
follow the alphabet of lines
draw corners that connect but do not overlap
follow proper computation, selection, and placement of dimension
terminate dimension lines with arrowheads
apply notes and leaders
determine sequence of drawing
use proper sheet layout and title block
determine and draw necessary views of an object
lay out and center views using orthographic projection
use unidirectional and/or aligned system of dimensioning
draw rounds & fillets
draw machine assembly
draw detail drawings
draw welding assembly
complete parts list
draw section lining
draw break lines
draw weld symbols
draw external and internal thread using the detail and schematic methods
select and use architect's scale
select and use mechanical scale
analyze problem for drawing solution
specify and use symbols
check for corrections
complete parts list
select and use title block

ENABLING TASKS

COMPETENCY NO. 18 TO COMPLETE A TECHNICAL ILLUSTRATION

select, use and maintain pencils
select, use and maintain triangles
use and maintain T squares, parallel bar, and drafting machine
use and maintain lettering guide
use and maintain electric eraser
select, use and maintain erasers and shield
select, use and maintain dry cleaning materials
select, use and maintain compass
select, use and maintain dividers
use and maintain drafting boards and tables
select, use and maintain lead pointers
use and maintain white printer
select, use and care for drawing media
select, use and care for reproduction media
select and use fastening materials
use and maintain dusting brush
select, use and maintain paper cutters
letter freehand, vertical Gothic (upper case letters, numbers, and fractions)
letter freehand, inclined Gothic (upper case letters, numbers, and fractions)
draw tangent lines, arcs and circles
select, use and maintain templates
draw parallel and perpendicular lines
use mathematical computations
follow the alphabet of lines
draw corners that connect but do not overlap
determine sequence of drawing
use proper sheet layout and title block
determine and draw necessary views of an object
use shading techniques (stippling, press-on, lined, etc.)
draw exploded isometrics
select, use and maintain reservoir pens
determine sequence of inking
draw external and internal threads using the detail and schematic methods
draw isometric arcs and circles
select and use architect's scale
center isometric drawings
draw isometric views
select and use mechanical scale
analyze problem for drawing solution
use and maintain mechanical lettering set
check for corrections
select and use title block

ENABLING TASKS

COMPETENCY NO. 19 TO DRAW PLAN VIEWS

select, use and maintain pencils
select, use and maintain triangles
use and maintain T squares, parallel bar, and drafting machine
use and maintain lettering guide
use and maintain electric eraser
select, use and maintain erasers and shield
select, use and maintain dry cleaning materials
select, use and maintain compass
select, use and maintain dividers
use and maintain drafting boards and tables
select, use and maintain lead pointers
use and maintain white printer
select, use and care for drawing media
select, use and care for reproduction media
select and use fastening materials
use and maintain dusting brush
select, use and maintain paper cutters
draw arcs and circles
draw tangent lines, arcs, and circles
select, use and maintain templates
draw parallel and perpendicular lines
use mathematical computations
follow the alphabet of lines
draw corners that connect but do not overlap
follow proper computation, selection, and placement of dimensions
apply notes and leaders
determine sequence of drawing
use proper sheet layout and title block
determine and draw necessary views of an object
lay out and center views using orthographic projection
use unidirectional and/or aligned system of dimensioning
draw section lining
use reference books
use calculator
select and use architect's scale
analyze problem for drawing solution
letter freehand, using condensed architectural or expanded architectural
terminate lines with arrowheads, slash lines, or dots
use and maintain mechanical lettering set
make shop drawings
specify and use symbols
draw floor plans
draw footing and foundation plans
use and maintain adjustable triangle
read and interpret design drawing specifications
use the correct technique of section and detail referencing
check for corrections
make computations for stairway design
use building code
use and specify window types and sizes
use and specify door types and sizes
use product catalogs
determine roof overhang
draw and specify concrete and masonry materials
draw and specify wood framing material
draw different material section symbols
select and use title block

ENABLING TASKS

COMPETENCY NO. 20 TO DRAW ELEVATIONS

select, use and maintain pencils
select, use and maintain triangles
use and maintain T squares, parallel bar, and drafting machine
use and maintain lettering guide
use and maintain electric eraser
select, use and maintain erasers and shield
select, use and maintain dry cleaning materials
select, use and maintain compass
select, use and maintain dividers
use and maintain drafting boards and tables
select, use and maintain lead pointers
use and maintain white printer
select, use and care for drawing media
select, use and care for reproduction media
select and use fastening materials
use and maintain dusting brush
select, use and maintain paper cutters
draw arcs and circles
draw tangent lines, arcs and circles
select, use and maintain templates
draw parallel and perpendicular lines
use mathematical computations
follow the alphabet of lines
draw corners that connect but do not overlap
follow proper computation, selection, and placement of dimensions
apply notes and leaders
determine sequence of drawing
use proper sheet layout and title block
determine and draw necessary views of an object
lay out and center views using orthographic projection
use unidirectional and/or aligned system of dimensioning
use reference books
draw sectional views (half, revolved, etc.)
select and use architect's scale
analyze problem for drawing solution
letter freehand using condensed architectural or expanded architectural
terminate lines with arrowheads, slash lines, or dots
use and maintain mechanical lettering set
make shop drawings
specify and use symbols
draw evaluations (interior and exterior)
use and maintain adjustable triangle
read and interpret design drawing specifications
use the correct technique of section and detail referencing
check for corrections
make computations for stairway design
use building code
use and specify window types and sizes
use and specify door types and sizes
use product catalogs
layout and draw roof pitch
determine roof overhang
determine vertical height in elevation form
draw elevation views of windows and doors
draw and specify concrete and masonry material
select and use title block

ENABLING TASKS

COMPETENCY NO. 21 TO COMPLETE SCHEDULES

select, use and maintain pencils
select, use and maintain triangles
use and maintain T squares, parallel bar, and drafting machine
use and maintain lettering guide
use and maintain electric eraser
select, use and maintain erasers and shield
select, use and maintain dry cleaning materials
select, use and maintain dry cleaning materials
select, use and maintain dividers
use and maintain drafting boards and tables
select, use and maintain lead pointers
use and maintain white printer
select, use and care for drawing media
select, use and care for reproduction media
select and use fastening materials
use and maintain dusting brush
select, use and maintain paper cutters
draw parallel and maintain paper cutters
draw parallel and perpendicular lines
use mathematical computations
follow the alphabet of lines
draw corners that connect but do not overlap
use proper sheet layout and title block
determine and draw necessary views of an object
use reference books
determine sequence of inking
select and use architect's scale
letter freehand using condensed architectural and expanded architectural
use and maintain mechanical lettering set
draw schedules
read and interpret design drawing specifications
check for corrections
use building code
use and specify window types and sizes
use and specify door types and sizes
use product catalogs
complete standardized forms
select and use title block

ENABLING TASKS

COMPETENCY NO. 22 TO DRAW SITE AND LANDSCAPE PLANS

select, use and maintain pencils
select, use and maintain triangles
use and maintain T squares, parallel bar, and drafting machine
use and maintain lettering guide
use and maintain electric eraser
select, use and maintain erasers and shield
select, use and maintain compass
select, use and maintain dividers
use and maintain drafting boards and tables
select, use and maintain lead pointers
use and maintain white printer
select, use and care for drawing media
select, use and care for reproduction media
select and use fastening materials
use and maintain dusting brush
select, use and maintain paper cutters
draw arcs and circles
draw tangent lines, arcs and circles
select, use and maintain templates
draw parallel and perpendicular lines
use mathematical computations
follow the alphabet of lines
draw corners that connect but do not overlap
follow proper computation, selection, and placement of dimensions
apply notes and leaders
determine sequence of drawing
use proper sheet layout and titleblock
determine and draw necessary views of an object
lay out and center views using orthographic protection
use unidirectional and/or aligned system of dimensioning
draw section lining
use shading techniques (stippling, press on, lined, etc.)
use reference books
use calculator
select and use architect's scale
select, use and maintain irregular (French) and adjustable curves
analyze problem for drawing solution
letter freehand condensed architectural and expanded architectural
terminate lines with arrowheads, slash lines, or dots
use and maintain mechanical lettering set
specifies and uses symbols
draw site plans
draw landscape plans
use and maintain adjustable triangle
read and interpret design drawing specifications
check for corrections
use building code
draw and specify concrete and masonry material
draw contours on a plan
draw a layout of a structure on site plan
draw and locate existing utilities to a structure
select and use title block

ENABLING TASKS

COMPETENCY NO. 23 TO DRAW ELECTRICAL AND MECHANICAL PLANS

select, use and maintain pencils
select, use and maintain triangles
use and maintain T squares, parallel bar, and drafting machine
use and maintain lettering guide
use and maintain electric eraser
select, use and maintain erasers and shield
select, use and maintain dry cleaning materials
select, use and maintain compass
select, use and maintain dividers
use and maintain drafting boards and tables
select, use and maintain lead pointers
use and maintain white printer
select, use and care for drawing media
select, use and care for reproduction media
select and use fastening materials
use and maintain dusting brush
select, use and maintain paper cutters
draw arcs and circles
draw tangent lines, arcs and circles
select use and maintain templates
draw parallel and perpendicular lines
use mathematical computations
follow the alphabet of lines
draw corners that connect but do not overlap
apply notes and leaders
determine sequence of drawing
use proper sheet layout and title block
lay out and center views using orthographic projection
draw section lining
use reference books
use calculator
select and use architect's scale
select and use engineer's scale
select, use and maintain irregular (French) and adjustable curves
letter freehand using condensed architectural and expanded architectural
use and maintain mechanical lettering set
make shop drawings
specifies and uses symbols
draw mechanical (PHV)
read and interpret design drawing specifications
check for corrections
use building code
use product catalogs
select and draw electrical symbols
select and draw mechanical symbols (PHV)
size and specify waste and water lines
layout and draw duct work
draw different material section symbols
select and use title block

ENABLING TASKS

COMPETENCY NO. 24 - TO PREPARE BID SHEETS

use mathematical computations
use reference books
use calculator
read and interpret design drawing specifications
check for corrections
use building code
use product catalogs
complete standardized forms
select and estimate electrical materials
select and estimate mechanical materials (PHV)

COMPETENCY NO. 25 TO DRAW SECTIONS AND DETAILS

select, use and and maintain pencils
select, use and maintain triangles
use and maintain T squares, parallel bar, and drafting machine
use and maintain lettering guide
use and maintain electric eraser
select, use and maintain erasers and sheild
select, use and maintain dry cleaning materials
select, use and maintain compass
select, use and maintain dividers
use and maintain drafting boards and tables
select, use and maintain lead pointers
use and maintain white printer
select, use and care for drawing media
select, use and care for reproduction media
select and use fastening materials
use and maintain dusting brush
select, use and maintain paper cutters
draw arcs and circles
draw tangent lines, arcs and circles
select, use and maintain templates
draw parallel and perpendicular lines
use mathematical computations
follow the alphabet of lines
draw corners that connect but do not overlap
follow proper computation, selection, and placement of dimensions
apply notes and leaders
determine sequence of drawing
use proper sheet layout and title block
determine and draw necessary views of an object
use undirectional and/or aligned system of dimensioning
draw detail drawings
draw section lining
draw break lines
use reference books
use calculator
draw sectional views (half, revolved, etc.)
locate and draw cutting plane lines

ENABLING TASKS

COMPETENCY NO. 25 (Cont'd) - TO DRAW SECTIONS AND DETAILS

select and use architect's scale
select, use and maintain irregular (French) and adjustable curves
analyze problem for drawing solution
letter freehand using condensed architectural, and expanded architectural
terminate lines with arrowheads, slash lines, or dots
use and maintain mechanical lettering set
specify and use symbols
use and maintain adjustable triangle
read and interpret design drawing specifications
use the correct technique of section and detail referencing
Check for corrections
make computations for stairway design
use building code
use and specify window types and sizes
use and specify door types and sizes
use product catalogs
lay out and draw roof pitch
determine roof overhang
determine vertical height in elevation form
draw and specify concrete and masonry material
draw and specify wood framing material
draw different material section symbols
select and use title block

COMPETENCY NO. 26 - TO DRAW FRAMING PLANS

select, use and maintain pencils
select, use and maintain triangles
use and maintain T squares, parallel bar, and drafting machine
use and maintain lettering guide
use and maintain electric eraser
select, use and maintain erasers and shield
select, use and maintain dry cleaning materials
select, use and maintain dividers
use and maintain drafting boards and tables
select, use and maintain lead pointers
use and maintain white printer
select, use and care for drawing media
select, use and care for reproduction media
select and use fastening materials
use and maintain dusting brush
select, use and maintain paper cutters
draw arcs and circles
draw tangent lines, arcs and circles
select, use and maintain templates
draw parallel and perpendicular lines

ENABLING TASKS

COMPETENCY NO. 26 (Cont'd) - TO DRAW FRAMING PLANS

use mathematical computations
follow the alphabet of lines
draw corners that connect but do not overlap
follow proper computation, selection, and placement of dimensions
apply notes and leaders
determine sequence of drawing
use proper sheet layout and titleblock
determine and draw necessary views of an object
use undirectional and/or aligned system of dimensioning
draw section lining
use reference books
use calculator
select and use architect's scale
analyze problem for drawing solution
letter freehand using condensed architectural and expanded architectural
use and maintain mechanical lettering set
calculate weights
draw framing plan
draw roof plans
read and interpret design drawing specifications
use the correct technique of section and detail referencing
check for corrections
use building code
lay out and draw roof pitch
determine roof overhand
draw and specify wood framing material
select and use title block

COMPETENCY NO. 27 - TO COMPLETE PRESENTATIONS

Select, use and maintain pencils
select, use and maintain triangles
use and maintain T squares, parallel bar, and drafting machine
use and maintain lettering guide
use and maintain electric eraser
select, use and maintain erasers and shield
select, use and maintain dry cleaning materials
select, use and maintain compass
select, use and maintain dividers
use and maintain drafting boards and tables
select, use and maintain lead pointers
use and maintain white printer
select, use and care for drawing media
select, use and care for reproduction media

ENABLING TASKS

COMPETENCY NO. 27 (Cont'd) - TO COMPLETE PRESENTATIONS

select and use fastening materials
select, use and maintain paper cutters
draw arcs and circles
draw tangent lines, arcs and circles
select, use and maintain templates
draw parallel and perpendicular lines
use mathematical computations
follow the alphabet of lines
draw corners that connect but do not overlap
follow proper computation, selection, and placement of dimensions
apply notes and leaders
determine sequence of drawing
use proper sheet layout and title block
determine and draw necessary views of an object
lay out and center views using orthographic projection
use unidirectional and/or aligned system of dimensioning
use sharing techniques (stippling, press-on lines, etc.)
use reference books
use calculator
determine sequence of inking
select and use architect's scale
analyze problem for drawing solution
letter freehand using condensed architectural and expanded architectural
terminate lines with arrowheads, slash lines or dots
make a rendering
develop construction models
use and maintain mechanical lettering set
select and use transfer tape
make shop drawings
specify and use symbols
draw floor plans
draw elevations (interior and exterior)
read and interpret design drawing specifications
check for corrections
make computations for stairway design
use building code
use and specify window types and sizes
use and specify door types and sizes
use product catalogs
layout and draw roof pitch
determine roof overhand
determine vertical height in elevation form
draw elevation views of windows and doors
use color and shadow techniques

ENABLING TASKS

COMPETENCY NO. 28 - TO COMPLETE DESIGN DRAWINGS AND OUTLINE SPECIFICATIONS FOR A COMMERCIAL BUILDING

select, use and maintain pencils
select, use and maintain triangles
use and maintain T squares, parallel bar, and drafting machine
use and maintain lettering guide
use and maintain electric eraser
select, use and maintain erasers and shield
select, use and maintain dry cleaning materials
select, use and maintain compass
select, use and maintain dividers
use and maintain drafting boards and tables
select, use and maintain lead pointers
use and maintain white printer
select, use and care for drawing media
select, use and care for reproduction media
select and use fastening materials
use and maintain dusting brush
select, use and maintain paper cutters
draw arcs and circles
draw tangent lines, arcs and circles
select, use and maintain templates
draw parallel and perpendicular lines
use mathematical computations
follow the alphabet of lines
draw corners that connect but do not overlap
follow proper computation, selection and placement of dimensions
apply notes and leaders
determine sequence of drawing
use proper sheet layout and title block
determine and draw necessary views of an object
lay out and center views using orthographic projection
use unidirectional and/or aligned system of dimensioning
draw detail drawings
draw section lining
use reference books
use calculator
determine sequence of inking
select and use architect's scale
analyze problem for drawing solution
letter freehand using condensed architectural and expanded architectural
terminate lines with arrowheads, slash lines or dots
make a rendering
select and use transfer tape
make shop drawings
specify and use symbols
draw floor plans
draw elevations (interior and exterior)
draw schedules
draw footing and foundation plans
draw mechanical (PHV)
use and maintain adjustable triangle

ENABLING TASKS

COMPETENCY NO. 28 (Cont'd) TO COMPLETE DESIGN DRAWINGS AND OUTLINE SPECIFICATIONS FOR A COMMERCIAL BUILDING

read and interpret design drawing specifications
use the correct technique of section and detail referencing
check for corrections
make computations for stairway design
use building code
use and specify window types and sizes
use and specify door types and sizes
use product catalogs
layout and draw roof pitch
determine roof overhang
determine vertical height in elevation form
draw elevation views of windows and doors
draw and specify concrete and masonry material
draw and specify wood framing material
draw different material section symbols
draw layout of a structure on site plan
select and use title block

COMPETENCY NO. 29 - TO MEASURE WITH A CHAIN

use mathematical computations
use and maintain transit
use and maintain rod and range pole
use and maintain chain
use chaining pins and redheads
check for corrections
record entries in field book
use and maintain plumb bob
use and maintain hand level

ENABLING TASKS

COMPETENCY NO. 30 -- TO DRAW A PROFILE

select, use and maintain pencils
select, use and maintain triangles
use and maintain T square, parallel bar and drafting machine
use and maintain lettering guide
use and maintain electric eraser
select, use and maintain erasers and shields
select, use and maintain dry cleaning materials
select, use and maintain dividers
use and maintain drafting boards and tables
select, use and maintain lead pointers
use and maintain white printer
select, use and maintain drawing media
select, use and maintain reproduction media
select and use fastening materials
use and maintain dusting brush
select, use and maintain paper cutter
letter freehand vertical Gothic (upper and lower case letters and numbers)
Letter freehand inclined Gothic (upper and lower case letters and numbers)
draw parallel and perpendicular lines
use mathematical computations
follow the alphabet of lines
draw corners that connect but do not overlap
apply notes and leaders
determine sequence of drawing
use proper sheet layout and title block
select, use and maintain reservoir pens
analyze problem for drawing solution
select and use engineer's scale
determine sequence of inking
check for corrections
select and use title block
calculate and interpolate elevations

ENABLING TASKS

COMPETENCY NO. 31 -- TO DRAW A MAP OF A SUBDIVISION PLAT

select, use and maintain pencils
select, use and maintain triangles
use and maintain T square, parallel bar and drafting machine
use and maintain lettering guide
use and maintain electric eraser
select, use and maintain erasers and shield
select, use and maintain dry cleaning materials
select, use and maintain compass
select, use and maintain dividers
use and maintain drafting boards and tables
select, use and maintain lead pointers
use and maintain white printer
select, use and maintain drawing media
select, use and maintain reproduction media
select and use fastening materials
use and maintain dusting brush
select, use and maintain paper cutter
letter freehand, vertical Gothic (upper and lower case letters and numbers)
letter freehand, inclined Gothic (upper and lower case letters and numbers)
draw arcs and circles
draw tangent lines, arcs and circles
draw parallel and perpendicular lines
use mathematical computations
follow the alphabet of lines
draw corners that connect but do not overlap
apply notes and leaders
determine sequence of drawing
use and maintain mechanical lettering set
use and maintain adjustable triangle
check for corrections
select and use title block
plot points on a grid layout

ENABLING TASKS

COMPETENCY NO. 32 - - TO DRAW CONTOUR LINES

select, use and maintain pencils
select, use and maintain triangles
use and maintain T square, parallel bar and drafting machine
use and maintain lettering guide
use and maintain electric eraser
select, use and maintain erasers and shield
select, use and maintain dry cleaning materials
select, use and maintain compass
use and maintain drafting boards and tables
select, use and maintain lead pointers
use and maintain white printer
select, use and maintain drawing media
select, use and maintain reproduction media
select and use fastening materials
use and maintain dusting brush
select, use and maintain paper cutter
letter freehand, vertical Gothic (upper and lower case letters and numbers)
letter freehand, inclined Gothic (upper and lower case letters and numbers)
draw arcs and circles
draw tangent lines, arcs and circles
draw parallel and perpendicular lines
follow the alphabet of lines
draw corners that connect but do not overlap
apply notes and leaders
determine sequence of drawing
use proper sheet layout and title block
select, use and maintain reservoir pens
use calculator
use and maintain protractor
select, use and maintain irregular (French) and adjustable curves
analyze problem for drawing solution
select and use Engineers scale
determine sequence of inking
use and maintain mechanical lettering set
use and maintain adjustable triangle
check for corrections
select and use title block
plot points on a grid layout

ENABLING TASKS

COMPETENCY NO. 33 -- TO DETERMINE ELEVATIONS BY LEVELING

use mathematical computations
use calculator
use and maintain transit
use and maintain rod and range pole
use and maintain chain
check for corrections
record entries in field book
select, use, and maintain plumb bob

COMPETENCY NO. 34 -- TO MEASURE ANGLES

use mathematical computations
use calculator
use and maintain transit
use and maintain rod and range pole
use and maintain chain
check for corrections
record entries in field book
select, use and maintain plumb bob

IX. CLASS RECORD LIST

DRAFTING
CLASS RECORD LIST

BEST COPY AVAILABLE

	Lay out a sheet for a drawing	Do freehand lettering	Multiview	Isometric	Oblique	Bisect a given line	Divide a given line into equal parts	Construct a circle tan. to given line at given point	Construct a circle tan. to given straight line & circle	Construct an arc tangent to two given circles	Construct an equilateral triangle	Hexagon within a given circle	Hexagon across given flats	Octagon from a given square	Ellipse using compass method	Ellipse using irregular (French) curve	Layout of angles	Measure to scale	Orthographic projection (Architectural)	Orthographic projection (Civil)	Orthographic projection (Machine)	Half section	Revolved section	Aligned section	Primary auxiliary	Secondary auxiliary	
COMPETENCY	1	2	3			4												5	6			7			8		
			A	B	C	A	B	C	D	E	F	G	H	I	J	K	L		A	B	C	A	B	C	A	B	
																											Date
																											Grade
																											Date
																											Grade
																											Date
																											Grade
																											Date
																											Grade
																											Date
																											Grade
																											Date
																											Grade
																											Date
																											Grade
																											Date
																											Grade
																											Date
																											Grade
																											Date
																											Grade
																											Date
																											Grade
																											Date
																											Grade

DRAFTING
CLASS RECORD LIST

	Isometric drawing	Oblique drawing	One Point Perspective	Trace in ink a detail drawing	Draw external & internal threads, left & right hand	Draw fasteners	Draw Springs	Line chart	Bar Chart	Pie chart	Organizational chart	Calculate tolerances and fits	Truncated right prism	Intersection of two cylinders at right angles	Transition piece of a rectangular to a round	Complete a plate cam profile drawing	Spur gear	Straight bevel gear and pinion	Machine assembly	Detail drawings	Welding assembly	Complete a technical illustration	Floor plans	Footing/foundation plan	Exterior elevations	Interior elevations	
ompentency	9			10	11			12				13	14			15	16		17			18	19		20		
	A	B	C		A	B	C	A	B	C	D		A	B	C		A	B	A	B	C		A	B	A	B	
																											Date
																											Grade
																											Date
																											Grade
																											Date
																											Grade
																											Date
																											Grade
																											Date
																											Grade
																											Date
																											Grade
																											Date
																											Grade
																											Date
																											Grade
																											Date
																											Grade
																											Date
																											Grade
																											Date
																											Grade

BEST COPY AVAILABLE

165

166

DRAFTING
CLASS RECORD LIST

BEST COPY AVAILABLE

	Door schedule	Window schedule	Room finish schedule	Site plan	Landscape plan	Electrical plans	Plumbing, heating and ventilation plans	Electrical	Plumbing, heating and ventilation	Wall section	Architectural details	Stair section(s)	Fireplace section(s)	Floor framing plans	Roof framing plan	Perspective (interior)	Perspective (exterior)	Presentation drawings	Models	Floor plans	Exterior elevations	Cross section	Site plan	Outline specifications	Measure with a chain	Draw a profile	
Compentency	21			22		23		24		25				26		27				28					29	30	
	A	B	C	A	B	A	B	A	B	A	B	C	D	A	B	A	B	C	D	A	B	C	D	E			
																											Date
																											Grade
																											Date
																											Grade
																											Date
																											Grade
																											Date
																											Grade
																											Date
																											Grade
																											Date
																											Grade
																											Date
																											Grade
																											Date
																											Grade
																											Date
																											Grade
																											Date
																											Grade
																											Date
																											Grade
																											Date
																											Grade
																											Date
																											Grade

167

168

DRAFTING - CLASS RECORD LIST

BEST COPY AVAILABLE

	Draw a map of a sub division plat	Draw contour lines	Determine elevations by leveling	Measure angles																							
Competency	31	32	33	34																							
																											Date
																											Grade
																											Date
																											Grade
																											Date
																											Grade
																											Date
																											Grade
																											Date
																											Grade
																											Date
																											Grade
																											Date
																											Grade
																											Date
																											Grade
																											Date
																											Grade
																											Date
																											Grade
																											Date
																											Grade
																											Date
																											Grade
																											Date
																											Grade

169 170

X. STUDENT COMPETENCY RECORD

STUDENT COMPETENCY RECORD

DRAFTING

_____
Name of Student

This is to certify that the above named student has demonstrated proficiency in the following tasks:

Competency	Task	Grade	Date Completed	Instructor
1.	Lay out a sheet for a drawing			
2.	Do freehand lettering			
3.	Complete freehand sketches A. Multiview B. Isometric C. Oblique			
4.	Complete geometric construction A. Bisect a given line B. Divide a given line into equal parts C. Construct a circle tangent to a given line at a given point D. Construct an arc tangent to a given straight line and circle E. Construct an arc tangent to two given circles F. Construct an equilateral triangle G. Hexagon within a given circle H. Hexagon across given flats I. Octagon from a given square J. Ellipse using the compass method K. Ellipse using an irregular (French) curve L. Laying out angles			

STUDENT COMPETENCY RECORD

DRAFTING

_____
Name of Student

This is to certify that the above named student has demonstrated proficiency in the following tasks:

Competency	Task	Grade	Date Completed	Instructor
5.	Measure to scale			
6.	Complete multiview drawings using orthographic projection A. Orthographic projection (Architectural) B. Orthographic projection (civil) C. Orthographic projection (machine)			
7.	Draw sectional views A. Half section B. Revolved section C. Aligned section			
8.	Complete auxiliary views A. Primary auxiliary B. Secondary auxiliary			
9.	Complete pictorial drawings A. Isometric drawing B. Oblique drawing C. One-point perspective			
10.	Trace in ink a detail drawing			
11.	Draw threads, fasteners and springs A. Draw external and internal threads, both left and right hand B. Draw fasteners C. Draw springs			

STUDENT COMPETENCY RECORD

DRAFTING

_____
Name of Student

This is to certify that the above named student has demonstrated proficiency in the following tasks:

Competency	Task	Grade	Date Completed	Instructor
12.	Draw graphic charts A. Line chart B. Bar chart C. Pie chart D. Organizational chart			
13.	Calculate tolerances and fits			
14.	Draw and construct models of developments and intersections A. Truncated right prism B. Intersection of two cylinders at right angles C. Transition piece of a rectangular to-a-round			
15.	Complete a plate cam profile drawing			
16.	Complete gear drawings A. Spur gear B. Straight bevel gear and pinion			
17.	Complete production drawings A. Machine assembly B. Detail drawings C. Welding assembly			
18.	Complete a technical illustration			
19.	Draw plan views A. Floor plans B. Footing/foundation plan			

176

177

STUDENT COMPETENCY RECORD

DRAFTING

_____
Name of Student

This is to certify that the above named student has demonstrated proficiency in the following tasks:

Competency	Task	Grade	Date Completed	Instructor
20.	Draw elevations A. Exterior elevations B. Interior Elevations			
21.	Complete schedules A. Door schedule B. Window schedule C. Room finish schedule			
22.	Draw site and landscape plans A. Site plan B. Landscape plan			
23.	Draw electrical and mechanical plans A. Electrical plans B. Plumbing, heating, and ventilation plans			
24.	Prepare bid sheets A. Electrical B. Plumbing, heating and ventilation			
25.	Draw sections and details A. Wall section B. Architectural details C. Stair section(s) D. Fireplace section(s)			
26.	Draw framing plans A. Floor framing plans B. Roof framing plan			

STUDENT COMPETENCY RECORD

DRAFTING

_____
Name of Student

This is to certify that the above named student has demonstrated proficiency in the following tasks:

Competency	Task	Grade	Date Completed	Instructor
27.	Complete presentations A. Perspectives (interior) B. Perspectives (exterior) C. Presentation drawings D. Models			
28.	Complete design drawings and outline specifications for a commercial building A. Floor plans B. Exterior elevations C. Cross-section D. Site plan E. Outline specifications			
29.	Measure with a chain			
30.	Draw a profile			
31.	Draw a map of a subdivision plat			
32.	Draw contour lines			
33.	Determine elevations by leveling			
34.	Measure angles			

181

180

_____
School Official Signature

_____
Student Signature

XI. JOB OPPORTUNITIES

JOB OPPORTUNITIES

Many of the competencies listed in this booklet lead to jobs that are available in the 10 counties served by the 26 Local Education Agencies and Indian Hills Community College in Southeastern Iowa. Students, teachers, and counselors may use the following information in designing course emphases for more effective instruction and counseling.

JOB OPPORTUNITIES

Dictionary of Occupational Titles Code Number	Office of Education Code Classification	Occupational Title	Competencies Necessary for Initial Employment	Recommended Additional Training
001.261	17.13	Drafter, Architectural	1 through 10 19 through 28	Building Construction
001.261	17.13	Drafter, Landscape	1 through 8 22, 27	Grading, drainage, paving, planting and garden struct.
002.261	17.13	Drafter, Aeronautical	1 through 18	Descriptive geometry, trigonometry
003.281	17.13	Drafter, Electrical	1 through 10, 23	Electrical theory, symbols
003.281	17.13	Drafter, Electronics	1 through 10, 13	Electronic theory, symbols, schematic, diagram
005.281	17.13	Drafter, Civil	1 through 10 22,29 through 34	Post-secondary experience
005.281	17.13	Drafter, Structural	1 through 10 19,20,25,26	Post-secondary experience
007.261		Drafter, Chief (Mach)	1 through 18	Post-secondary experience Work experience
007.261		Drafter, Chief (Arch.)	1 through 10 19 through 28	Post-secondary experience Work experience
007.261		Drafter (Chief (Civil)	1 through 10 29 through 34	Post-secondary experience Work experience
007.161		Engineering Assistant Mechanical	1 through 18	Algebra, Trigonometry, post-secondary experience
007.261		Drafter, Patent	1 through 18	Interpretation of specifications
007.261		Drafter, Tool Design	1 through 18	Post-secondary experience, machine shop
007.261	17.13	Drafter, Mechanical	1 through 18	Machine shop

BEST COPY AVAILABLE

JOB OPPORTUNITIES (CONT'D)

Code Number	Classification	Occupational Title	Competencies	Additional Training
013.161		Agricultural Engineering Technician	1 through 17	Post-secondary experience
017.261	17.13	Detailer	1 through 18	
017.261		Drafter, Commercial	1 through 13, 19 20, 25, 27	
017.261	17.13	Drafter, Heating and Ventilating	1 through 10 19,23,24,25,28	Load calculations, duct & equipment sizing, and commercial blueprint reading
017.261	17.13	Drafter, Plumbing	1 through 10 19, 23, 25, 28	Pipe and equipment sizing, commercial blueprint reading
017.281		Technical Illustrator	1 through 10	Art courses, use of airbrush, cartoon experience
018.167		Surveyor Assistant, Instruments	29,33,34	Post-secondary experience
018.261		Drafter, Cartographic	1 through 10 29 through 34	Post-secondary
018.261		Drafter, Topographical	1 through 10 29 through 34	Read survey notes, aerial photographs and maps
019.261	17.13	Estimator and Drafter	1 through 10, 19, 22, 23, 24 29, 33, 34	Estimate labor and material cost, electrical theory and symbols, inspection experience
275.357		Sales Representative, School Equipment and Supplies	1 through 10, 19, 20	Sales knowledge, product knowledge

BEST COPY AVAILABLE

GLOSSARY

GLOSSARY

Definitions included in this glossary are for use in the articulated curriculum model. Applications of those terms outside this model may require a slightly different interpretation.

GLOSSARY

AMERICAN NATIONAL STANDARDS INSTITUTES
1450 Broadway
New York, New York 10018

Publisher: American Society of Mechanical Engineers
United Engineering Center
345 East 47th Street
New York, N.Y. 10017

All symbols and conventions for building materials, walls, floors, window and door openings, electrical and plubming fixtures, heating and cooling facilities, and duct works have been standardized by the American Standards Association.

A W S

American Welding Society
2501 N W 7th Street
Miami, Florida 33125

Backgrounds
A reversed drawing traced from the backside of a drawing sheet to replace a reproducible intermediate (sepia).

Built Ins
See permanent features

Detail Callouts
To provide specific instructions with a drawing, dimensions, notes, or specifications.

Drawing Paper
Any acceptable paper used in the drafting industry.

Equivalent criteria (Reference: "Note" Equivalent criteria may be used").
To be acceptable, substituted data (and/or alternate projects) must meet the minimum criteria requirements of the competency defined herein.

This statement provides the instructor the use of his/her own material and/or consideration of comparable performance, instead of, the exacting specified criteria. Also, this statement provides allowed variation to minimize possible abuse of the intent of this competency system.

Glossary (Continued)

Fabrication
The construction of manufacture of a part, assembly or structure.

Freehand
Without any drafting aids.

Graphical Method
Not to be done mathematically.

HUD Standards
1. Manual of Acceptable Practices #4930
2. Minimum Property Standards for one and two family dwellings #4900
3. Architectural Proce sing and Inspection for Mortgage Insurance #4145

(Above listed publications are published by the United States Department of Housing and Urban Development, printed by United States Printing Office, Washington, D.C. 20402).

Illustration Board
A heavy cardboard material with a white or light finished face.

Local Building Code: Model building code to be selected from the following and preferably the code adopted by the local governing agency.

1. Uniform Building Code
   by International Conference of Building Officials
   5360 South Workman Mill Road
   Whittier, California 90601

2. National Building Code
   by American Insurance Association
   Engineering and Safety Department
   120 South LaSalle Street
   Chicago, Illinois 60603

3. The Boca Basic Building Code
   by Building Officials and Code Administrators
   International Inc.
   1313 East 60th Street
   Chicago, Illinois 60637

4. Southern Building Code
   by Southern Building Conference
   3617 Eighth Avenue South
   Birmingham, Alabama 35222

Machinery's Handbook
21st Edition, by Oberg, Jones and Horton, Industrial Press, Inc.,
200 Madison Avenue. New York, N.Y. 10016

Necessary
Minimums needed to accomplish the task or provide clarity to the final product.

Glossary (Cont'd)

Non-Reproducible
Lines that will not be shown when drawing is reproduced.

Outlined or Profiled
To silhouette or darken the principal features or main parts of the drawing.

Permanent Features (Built Ins)
Forming an integral part of a structure such as cabinets, appliances and other fixtures which remain in the structure and are not moveable.

Plain Paper
Any white unruled paper.

PHV
Plumbing, heating and ventilating.

Proper Drafting Procedures
Procedures in accordance with any standard textbook.
Example: Basic Technical Drawing, Spencer and Dygdon,
The Macmillan Co.
New York, N.Y.

Proper Relationship
See Competency No. 3A, Criteria No. 2

Proportional
Depth, width and height measurements to be in ratio to actual object.

Reproduce
Copy diazo-dry processes.

Reproducible
All lines, letters, and numbers required for complete drawing should reproduce clearly.

Reproducible Intermediate (sepias)
A print with a deep yellow-brown line from which other diazo prints may be reproduced.

Smooth
Having no irregularities; consistently even.

Standard Orthographic Projection
The arrangement of the top view above the front view and the right side view placed to the right side of the front view.

Symboled
To identify architectural parts with standard architectural symbols.

Glossary (Continued)

Time Saver Standards

Time Saver Standards for Architectural Design Data
5th Edition, by J. H. Callender
McGraw-Hill (publisher)
1221 Avenue of the Americas
New York, N.Y. 10020

Tolerance

The range of variation permitted in maintaining a specified dimension.

Tools and Equipment

Any tools and equipment needed to complete a particular task. Specific drafting equipment requirements will be stated in addition to the standard drafting tools and equipment.

Tracing Paper

Clearprint 1000H or equal.

Utility Hook Ups

A public service connection such as power, water or waste lines.

191 "END OF DOCUMENT"